Radxa E54C Schematic

V1.2

Table of Content

01.cover
02.Index
03.Block Diagram
04.RK3582_Power/GND
05.RK3582_OSC/PLL/PMUIO2
06.RK3582 DDR Controler
07.RK3582 Flash/SD/USB
08.RK3582_ADC/ GPIO/CSI
09.RK3582_MIPI Interface
10.RK3582 PCIE2/EDP/USB3
11.RK3582 GPIO
12.DRAM-LPDDR4/4X
13.EMMC/SPI
14.RTL8367RB
15.RJ45
16.USB HUB/FAN/USB Por
17.HDMI 8K
18.TFT
19.UART/USB HUB
20.TF/RTC/EEPROM
21.M Key
22.Power_PMIC
23.Power_Ext
24.Power_DC IN
25.Type-C Port
26.HOLE/KEY/LED/Connect

Size	Title: E54C	REV
A4	Page Name: Index	V1.2
Date: Wednesday, December 18, 2024	Sheet 02 of 26	

E54C Block Diagram

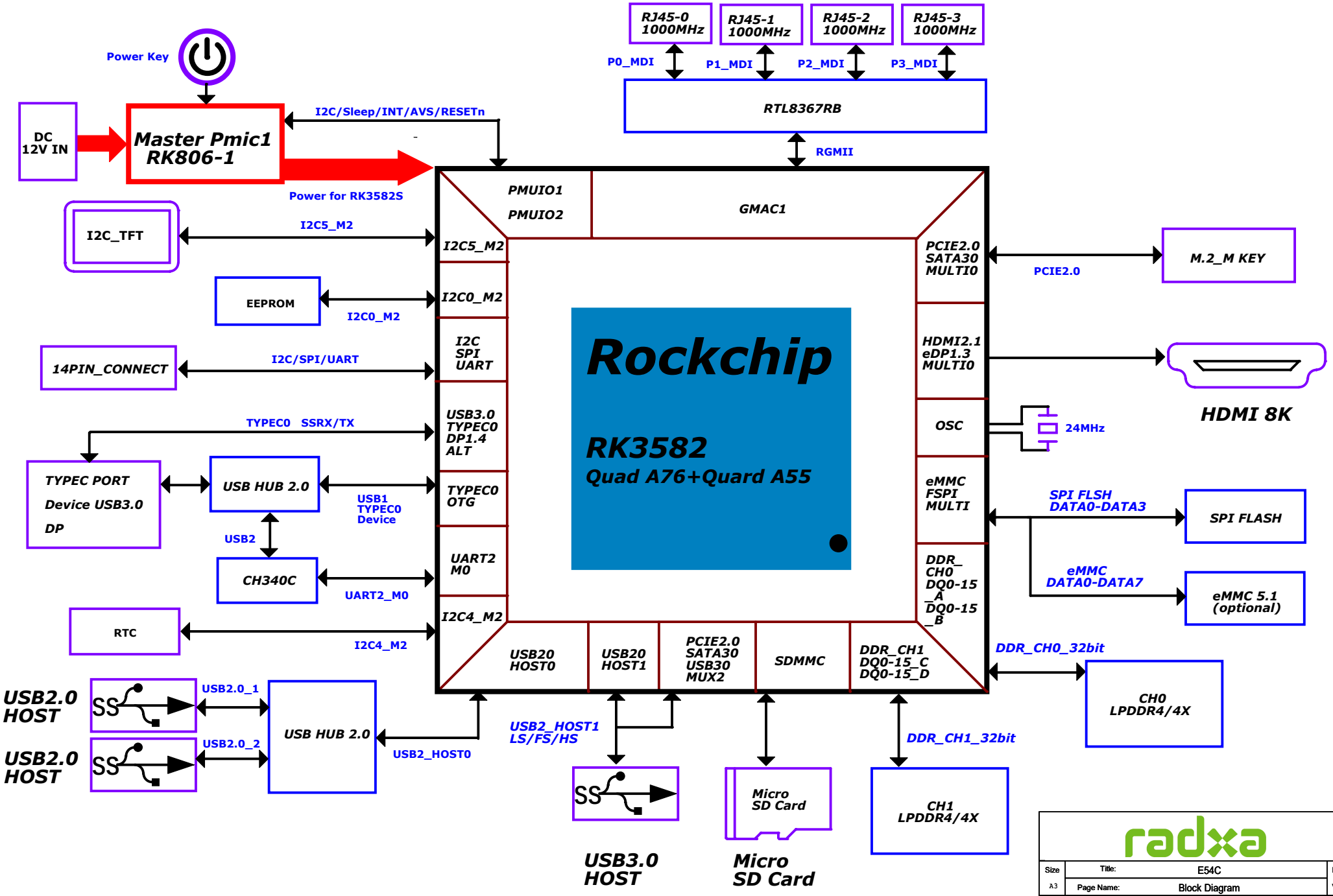

radxa

Size	Title:	E54C	REV
A3	Page Name:	Block Diagram	V1.2
Date: Friday, March 28, 2025	Sheet 03 of 26		

RK3582(Power&Gnd)

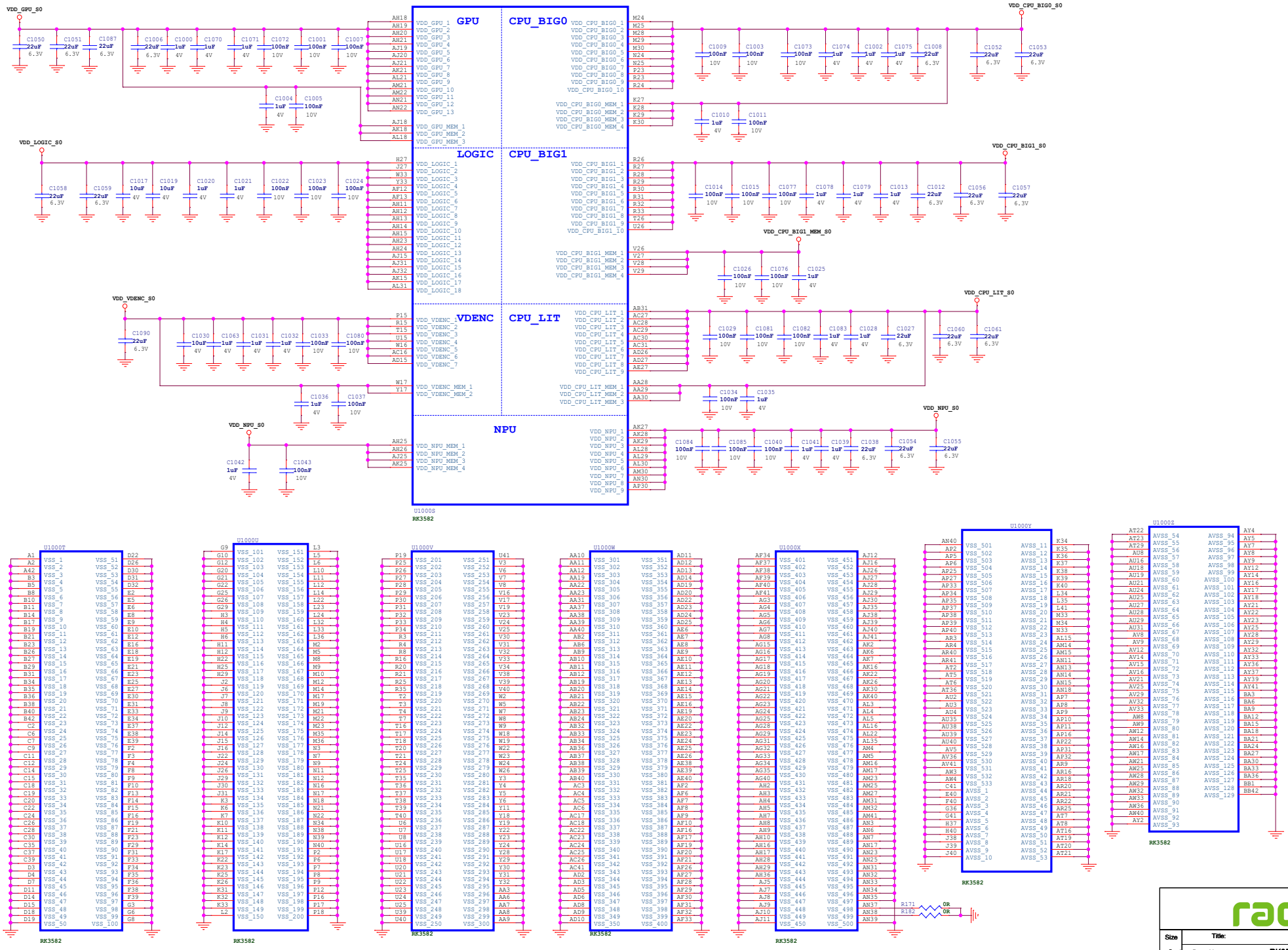

radxa

Size	Title:	E54C	REV
Custom	Page Name:	RK3582_Power/GND	V1.2
Date: Thursday, December 19, 2024	Sheet 04 of 26		

RK3582 (OSC/PLL/PMUIO1)

U1000E RK3582

OSC

R1100 22R — XOUT T42 — XOUT_24M
Y1100 24MHz (X1, GND, GND, X2) — R1102 510K 1% — XIN T41 — XIN_24M
C1111 18pF 50V
C1112 18pF 50V
VCCA_1V8_S0 — C1100 100nF 10V — N35 OSC_1V8_1, N36 OSC_1V8_2

PLL

VDDA_0V75_S0 — C1113 1uF 6.3V, C1103 100nF 10V — Y26 PLL_DVDD0V75
VCCA_1V8_S0 — C1114 1uF 6.3V, C1104 100nF 10V — AB25 PLL_AVDD1V8
AA26 PLL_AVSS

PMUIO1 Domain

Operating Voltage=1.8V Only

NPOR	V42						PMIC_RESET_L
TVSS	V41						
	W38			REFCLK_OUT	/	GPIO0_A0_d	
	AC39		TSADC_SHUT ORG	/ TSADC_SHUT_M0	/	GPIO0_A1_z	TSADC_SHUT
	W41			PMIC_SLEEP1	/	GPIO0_A2_d	SLEEP1_RESET1_DEVOFF1_VSEL1
	AD39			PMIC_SLEEP2	/	GPIO0_A3_d	VSEL2
	AC38			SDMMC_DET	/	GPIO0_A4_u	SDMMC_DET_L
	Y39	R1115 22R	PMU_DEBUG / SDMMC_PWREN	/ SPI2_CLK_M2	/	GPIO0_A5_d	PMIC_SPI_CLK
	W39	R1116 22R	I2C0_SDA_M0	/ SPI2_MOSI_M2	/	GPIO0_A6_z	PMIC_SPI_MOSI
	W42			PMIC_INT_L	/	GPIO0_A7_u	PMIC_INT_L
	AC37		UART0_RX_M1 / I2C1_SCL_M1	/ SPI2_CS1_M2	/	GPIO0_B0_z	RTC_INT_L
	W40		PWM5_M0 / UART0_TX_M1 / I2C1_SDA_M1	/ SPI2_CS0_M2	/	GPIO0_B1_z	PMIC_SPI_CS
	AD38		CLK32K OUT0	CLK32K_IN	/	GPIO0_B2_u	User_KEY
	Y38		I2C0_SCL_M0	/ SPI2_MISO_M2	/	GPIO0_B3_z	

PMUIO1_1V8_1, PMUIO1_1V8_2 — N37, R36 — VCC1V8_PMU_DDR_S3 — C1101 100nF 10V

PMUIO1/2 Domain Logic Power

Operating Voltage=0.75V

PMU_0V75_1 AJ36, PMU_0V75_2 AJ37 — VDD_0V75_S3 — C1105 100nF 10V, C1125 1uF 4V

C1110 100nF 10V — R1104 0R

SDMMC_DET_L — R64 NC — VCC1V8_PMU_DDR_S3
User_KEY — R33 10K — VCC1V8_PMU_DDR_S3

VCC_3V3_PMU — R1113 2.2K, R1114 2.2K — I2C2_SCL_M0, I2C2_SDA_M0

VCC_3V3_PMU — R302 2.2K, R303 2.2K — I2C0_SCL_M2, I2C0_SDA_M2

VCC_3V3_PMU — R1111 2.2K, R1112 2.2K — I2C4_SDA_M2, I2C4_SCL_M2

VCC_3V3_PMU — R90689 2.2K, R90688 2.2K — I2C6_SDA_M0, I2C6_SCL_M0

RK3582 (PMUIO2)

U1000F RK3582

PMUIO2 Domain

Operating Voltage=1.8V/3.3V

	PCIE20X1_1_CLKREQN_M0		I2S1_MCLK_M1	I2C1_SCL_M0		UART2_TX_M0	JTAG_TCK_M2	GPIO0_B5_d	AH39	UART2_TX_M0
	PCIE20X1_1_WAKEN_M0		I2S1_SCLK_M1	I2C1_SDA_M0		UART2_RX_M0	JTAG_TMS_M2	GPIO0_B6_d	AH40	UART2_RX_M0
	PCIE20X1_1_PERSTN_M0	SPI0_CS1_M0	I2S1_LRCK_M1	I2C2_SCL_M0		CAN0_TX_M0	PWM0_M0	GPIO0_B7_d	AK39	I2C2_SCL_M0
		SPI0_MOSI_M0		I2C2_SDA_M0	PDM0_CLK0_M1	CAN0_RX_M0	PWM1_M0	GPIO0_C0_d	AM40	I2C2_SDA_M0
							PMIC_SLEEP3	GPIO0_C1_d	AM38	VSEL3
							PMIC_SLEEP4	GPIO0_C2_d	AG36	VSEL4
							PMIC_SLEEP5	GPIO0_C3_d	AH38	VSEL5
DP0_HPDIN_M1				I2C4_SDA_M2	PDM0_CLK1_M1	UART0_RX_M0	PWM2_M0	GPIO0_C4_d	AL38	I2C4_SDA_M2
			I2S1_SDI0_M1	I2C4_SCL_M2	PWM4_M0	UART0_TX_M0	GPU_AVS	GPIO0_C5_u	AG38	I2C4_SCL_M2
SATA_CP_POD		SPI0_CLK_M0	I2S1_SDI1_M1		PWM5_M1	UART0_RTSN	NPU_AVS	GPIO0_C6_u	AH42	SYS_LED
		SPI0_MISO_M0	I2S1_SDI2_M1	I2C6_SDA_M0	PDM0_SDI0_M1	UART1_RTSN_M2	PWM6_M0	GPIO0_C7_d	AL40	I2C6_SDA_M0
		SPI3_MISO_M2	I2S1_SDI3_M1	I2C6_SCL_M0	PDM0_SDI1_M1	UART1_CTSN_M2	PWM7_IR_M0	GPIO0_D0_d	AG39	I2C6_SCL_M0
	HDMI_TX0_CEC_M1	SPI0_CS0_M0	I2S1_SDO0_M1	I2C0_SCL_M2	UART0_CTSN	UART1_TX_M2	CPU_BIG0_AVS	GPIO0_D1_u	AH41	I2C0_SCL_M2
		SPI3_MOSI_M2	I2S1_SDO1_M1	I2C0_SDA_M2		UART1_RX_M2		GPIO0_D2_u	AG41	I2C0_SDA_M2
		SPI3_CLK_M2					LITCPU_AVS	GPIO0_D3_u	AG37	LAN1_LED
SATA_CPDET	HDMI_TX0_SDA_M1	SPI3_CS0_M2	I2S1_SDO2_M1	I2C1_SCL_M2	PDM0_SDI2_M1	CAN2_RX_M1	PWM3_IR_M0	GPIO0_D4_u	AL39	USB_OTG_PWREN_H
SATA_MP_SWITCH	HDMI_TX0_SCL_M1	SPI3_CS1_M2	I2S1_SDO3_M1	I2C1_SDA_M2		CAN2_TX_M1	CPU_BIG1_AVS	GPIO0_D5_u	AM39	
					PDM0_SDI3_M1		PMIC_SLEEP6	GPIO0_D6_d	AG42	VSEL6

PMUIO2_1V8_1, PMUIO2_1V8_2 — V37, Y37 — VCC1V8_PMU — C1106 100nF 10V

PMUIO2_1, PMUIO2_2 — V35, V36 — VCC_3V3_PMU — C1107 100nF 10V

VCC1V8_PMU — R90696 NC — VCC_3V3_S3; R90695 0R — VCC1V8_PMU_DDR_S3

VCC_3V3_PMU — R90697 NC — VCC1V8_PMU_DDR_S3; R90698 0R — VCC_3V3_S3

radxa

Size	Title:	E54C	REV
A3	Page Name:	RK3582_OSC/PLL/PMUIO2	V1.2
Date: Thursday, December 19, 2024	Sheet 05 of 26		

RK3582 (DDR PHY)

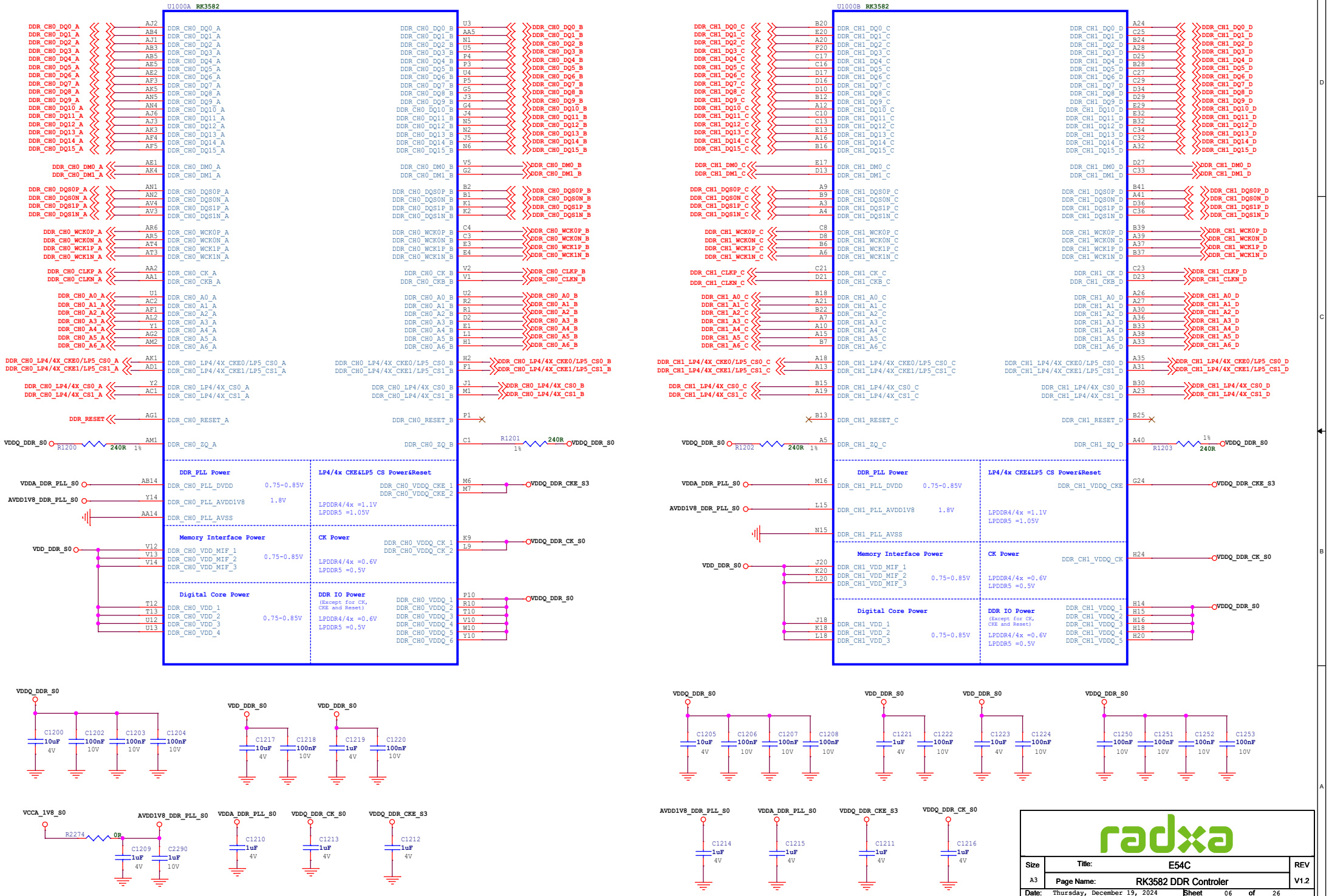

RK3582 (EMMCIO Domain)

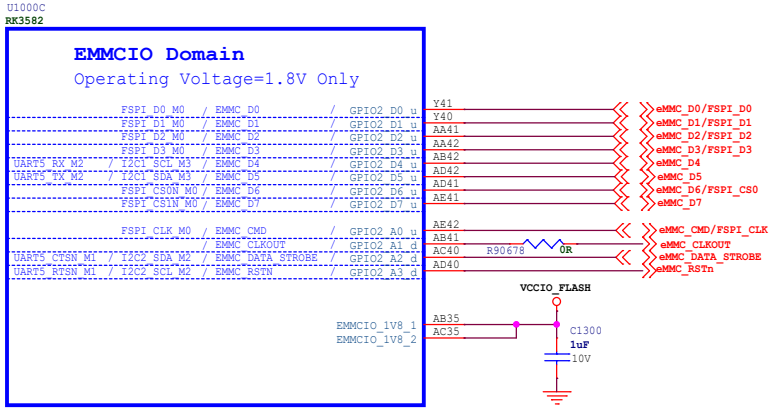

RK3582 (VCCIO2 Domain)

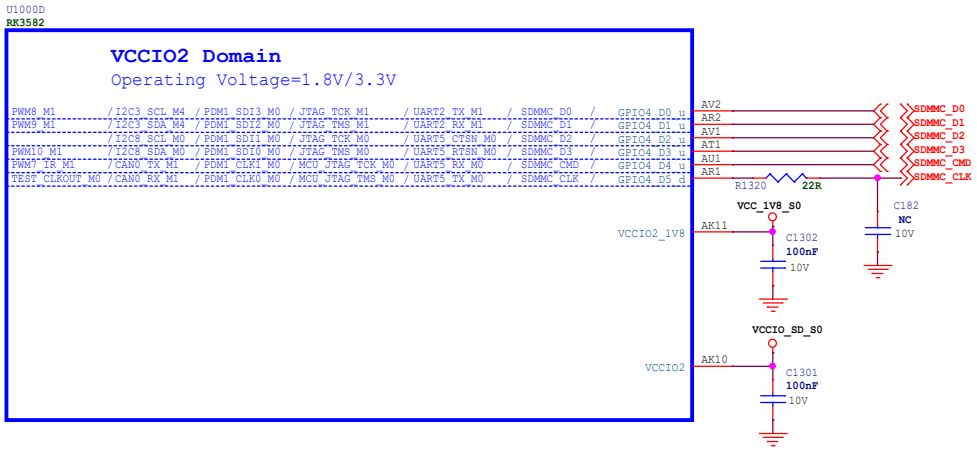

RK3582 (USB3.0/DP1.4)

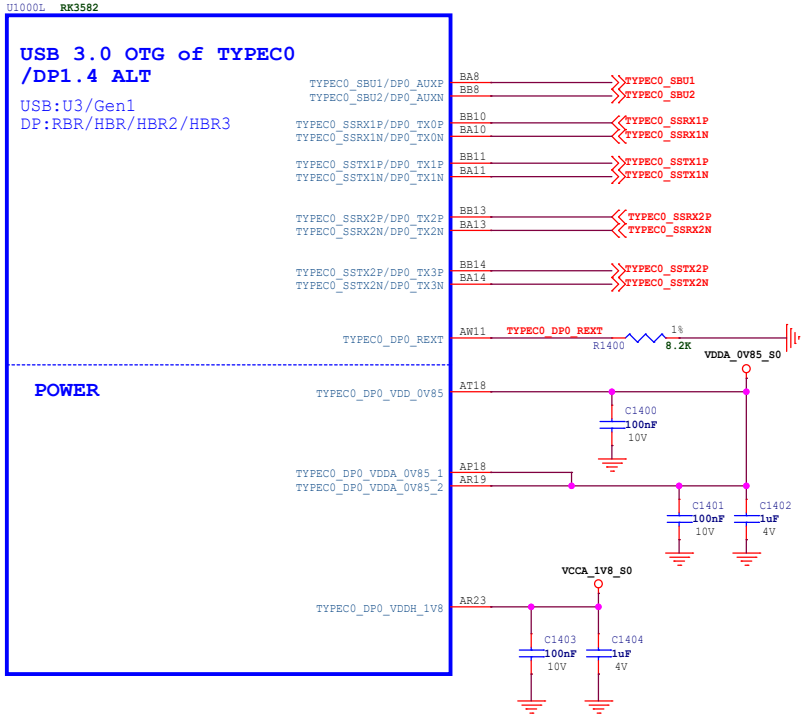

RK3582 (USB2.0)

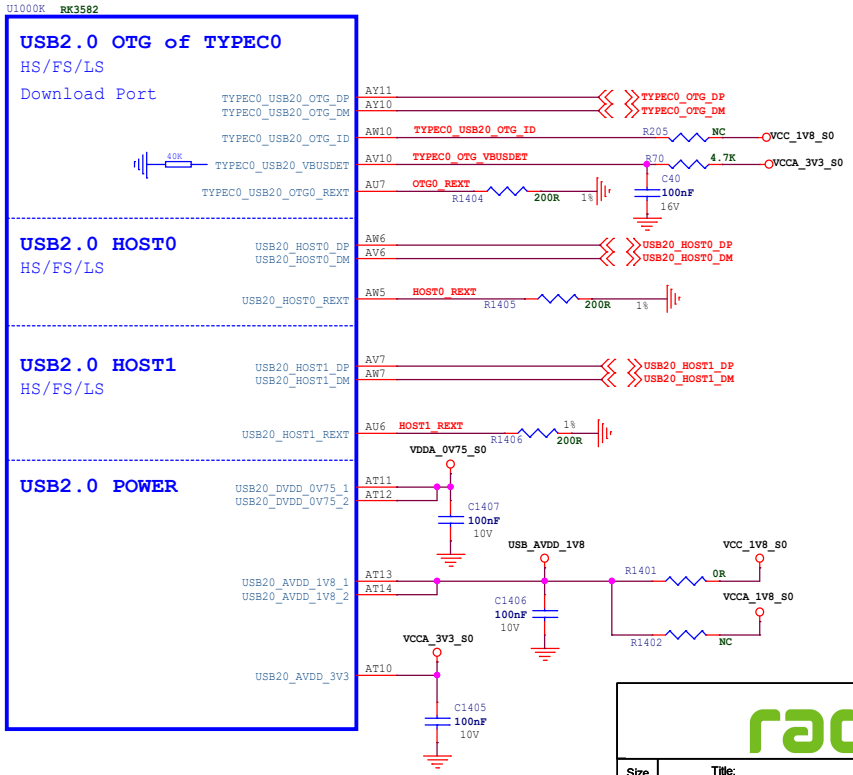

radxa

Size	Title:	E54C	REV
A3	Page Name:	RK3582 Flash/SD/USB	V1.2
Date: Thursday, December 19, 2024	Sheet 07 of 26		

RK3582 (SARADC/OTP/TSADC)

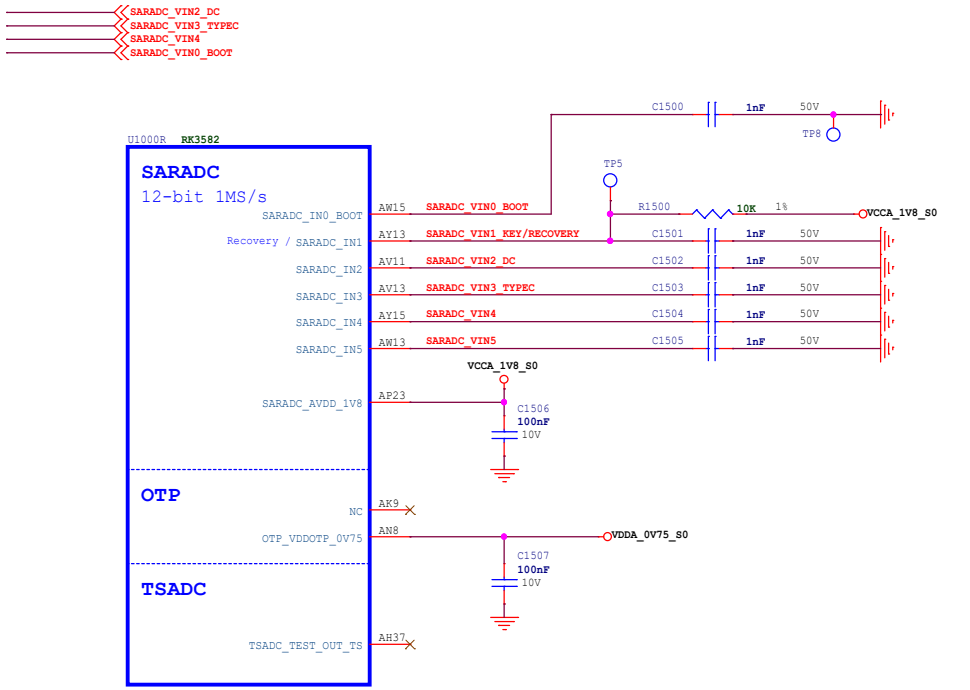

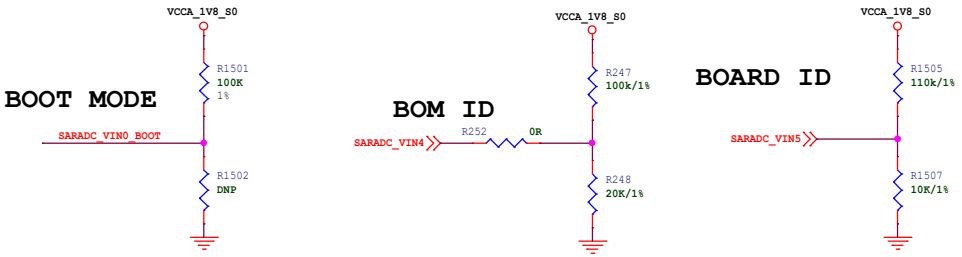

RK3582 (MIPI_DPHY CSI0 RX)

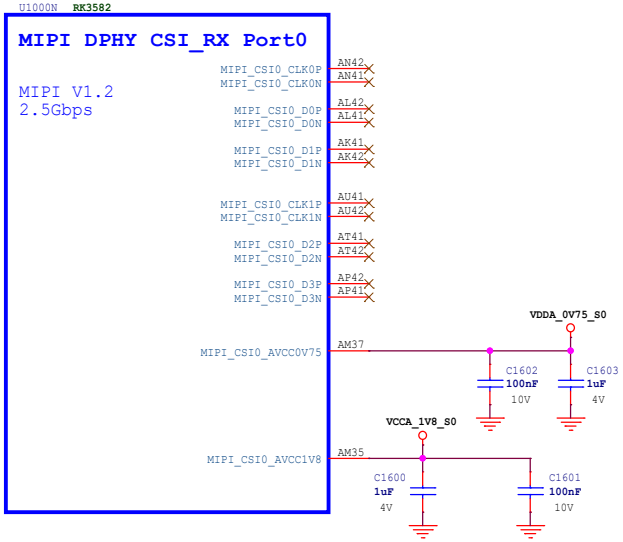

RK3582 (VCCIO1 Domain)

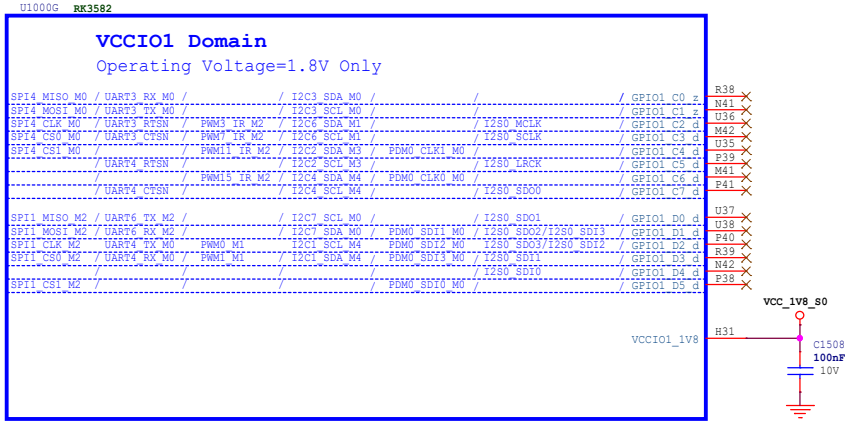

radxa

Size	Title:	E54C	REV
A3	Page Name:	RK3582_ADC/ GPIO/CSI	V1.2
Date: Thursday, December 19, 2024	Sheet 08 of 26		

RK3582(MIPI_D/C PHY1)

U1000P RK3582

MIPI D/C-PHY DSI_TX Port1

D-PHY:V2.0
4.5Gbps/Lane

C-PHY:V1.1
5.7Gbps/Trio

MIPI_DPHY1_TX_CLKP/MIPI_CPHY1_TX_TRIO1_C	BB19
MIPI_DPHY1_TX_CLKN/MIPI_CPHY1_TX_TRIO1_B	BA19
MIPI_DPHY1_TX_D0P/MIPI_CPHY1_TX_TRIO0_B	BB16
MIPI_DPHY1_TX_D0N/MIPI_CPHY1_TX_TRIO0_A	BA16
MIPI_DPHY1_TX_D1P/MIPI_CPHY1_TX_TRIO1_A	BA17
MIPI_DPHY1_TX_D1N/MIPI_CPHY1_TX_TRIO0_C	BB17
MIPI_DPHY1_TX_D2P/MIPI_CPHY1_TX_TRIO2_B	BA20
MIPI_DPHY1_TX_D2N/MIPI_CPHY1_TX_TRIO2_A	BB20
MIPI_DPHY1_TX_D3P/NO_USE	BB22
MIPI_DPHY1_TX_D3N/MIPI_CPHY1_TX_TRIO2_C	BA22

MIPI D/C-PHY CSI_RX Port1

D-PHY:V2.0
4.5Gbps/Lane

C-PHY:V1.1
5.7Gbps/Trio

MIPI_DPHY1_RX_CLKP/MIPI_CPHY1_RX_TRIO1_C	BA26
MIPI_DPHY1_RX_CLKN/MIPI_CPHY1_RX_TRIO1_B	BB26
MIPI_DPHY1_RX_D0P/MIPI_CPHY1_RX_TRIO0_B	BA23
MIPI_DPHY1_RX_D0N/MIPI_CPHY1_RX_TRIO0_A	BB23
MIPI_DPHY1_RX_D1P/MIPI_CPHY1_RX_TRIO1_A	BB25
MIPI_DPHY1_RX_D1N/MIPI_CPHY1_RX_TRIO0_C	BA25
MIPI_DPHY1_RX_D2P/MIPI_CPHY1_RX_TRIO2_B	BB28
MIPI_DPHY1_RX_D2N/MIPI_CPHY1_RX_TRIO2_A	BA28
MIPI_DPHY1_RX_D3P/NO_USE	BA29
MIPI_DPHY1_RX_D3N/MIPI_CPHY1_RX_TRIO2_C	BB29

Power

MIPI_D/C_PHY1_VREG — AT27 MIPI_D/C_PHY1_VREG — C1612 1uF 4V

MIPI_D/C_PHY1_VDD — AR27 — VDDA_0V75_S0 — C1613 1uF 4V

MIPI_D/C_PHY_VDD_1V2_2 — AR35 — VDDA_1V2_S0 — C1608 100nF 10V

MIPI_D/C_PHY_VDD_1V8_2 — AT30 — VCCA_1V8_S0 — C1610 100nF 10V

RK3582(MIPI_D/C PHY0)

U1000O RK3582

MIPI D/C-PHY DSI_TX Port0

D-PHY:V2.0
4.5Gbps/Lane

C-PHY:V1.1
5.7Gbps/Trio

MIPI_DPHY0_TX_CLKP/MIPI_CPHY0_TX_TRIO1_C	BB34
MIPI_DPHY0_TX_CLKN/MIPI_CPHY0_TX_TRIO1_B	BA34
MIPI_DPHY0_TX_D0P/MIPI_CPHY0_TX_TRIO0_B	BB31
MIPI_DPHY0_TX_D0N/MIPI_CPHY0_TX_TRIO0_A	BA31
MIPI_DPHY0_TX_D1P/MIPI_CPHY0_TX_TRIO1_A	BA32
MIPI_DPHY0_TX_D1N/MIPI_CPHY0_TX_TRIO0_C	BB32
MIPI_DPHY0_TX_D2P/MIPI_CPHY0_TX_TRIO2_B	BA35
MIPI_DPHY0_TX_D2N/MIPI_CPHY0_TX_TRIO2_A	BB35
MIPI_DPHY0_TX_D3P/NO_USE	BB37
MIPI_DPHY0_TX_D3N/MIPI_CPHY0_TX_TRIO2_C	BA37

MIPI D/C-PHY CSI_RX Port0

D-PHY:V2.0
4.5Gbps/Lane

C-PHY:V1.1
5.7Gbps/Trio

MIPI_DPHY0_RX_CLKP/MIPI_CPHY0_RX_TRIO1_C	BB41
MIPI_DPHY0_RX_CLKN/MIPI_CPHY0_RX_TRIO1_B	BA41
MIPI_DPHY0_RX_D0P/MIPI_CPHY0_RX_TRIO0_B	BA38
MIPI_DPHY0_RX_D0N/MIPI_CPHY0_RX_TRIO0_A	BB38
MIPI_DPHY0_RX_D1P/MIPI_CPHY0_RX_TRIO1_A	BA40
MIPI_DPHY0_RX_D1N/MIPI_CPHY0_RX_TRIO0_C	AY40
MIPI_DPHY0_RX_D2P/MIPI_CPHY0_RX_TRIO2_B	AY42
MIPI_DPHY0_RX_D2N/MIPI_CPHY0_RX_TRIO2_A	BA42
MIPI_DPHY0_RX_D3P/NO_USE	AW41
MIPI_DPHY0_RX_D3N/MIPI_CPHY0_RX_TRIO2_C	AW42

Power

MIPI_D/C_PHY0_VREG — AT33 MIPI_D/C_PHY0_VREG — C1604 1uF 4V

MIPI_D/C_PHY0_VDD — AR33 — VDDA_0V75_S0 — C1605 1uF 4V — C1611 100nF 10V

MIPI_D/C_PHY_VDD_1V2_1 — AR34 — VDDA_1V2_S0 — C1607 100nF 10V

MIPI_D/C_PHY_VDD_1V8_1 — AR30 — VCCA_1V8_S0 — C1609 100nF 10V

Size	Title:	E54C	REV
A3	Page Name:	RK3582_MIPI Interface	V1.2
Date: Thursday, December 19, 2024	Sheet 09 of 26		

RK3582(PCIE20/SATA30/USB30)

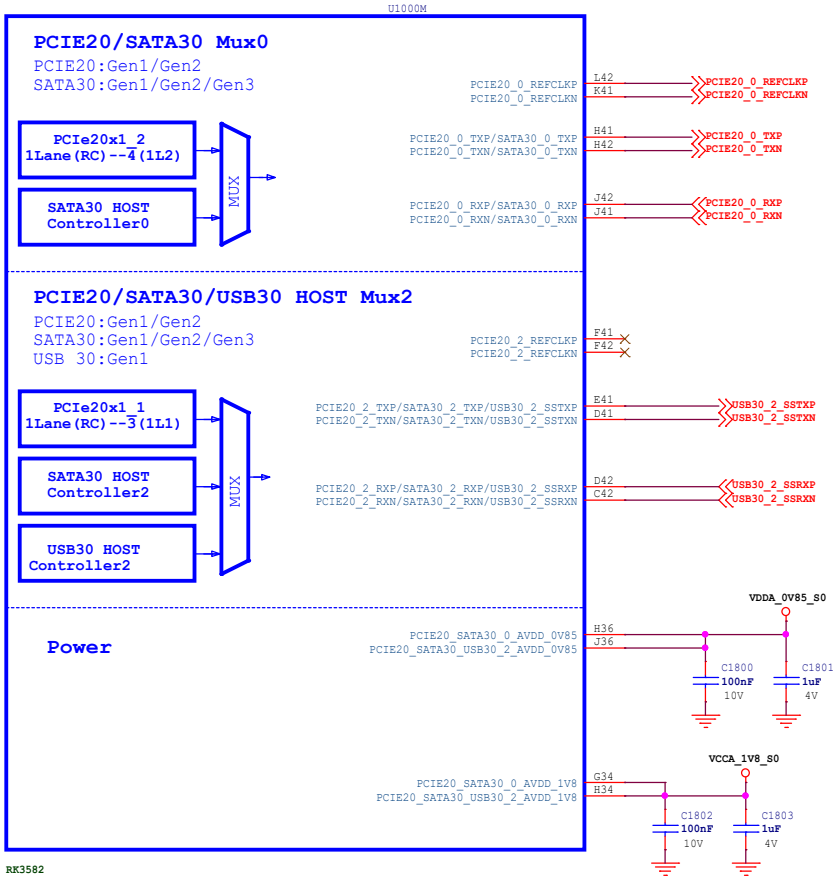

RK3582(HDMI2.1 TX/eDP1.3 TX)

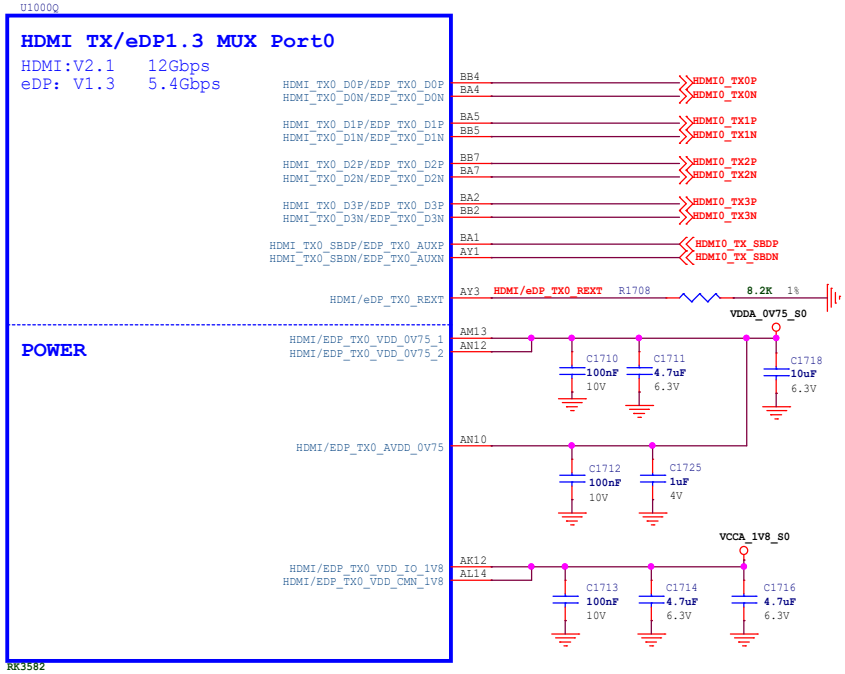

Size	Title:	E54C	REV
A3	Page Name:	RK3582 PCIE2/EDP/USB3	V1.2
Date: Thursday, December 19, 2024	Sheet 10 of 26		

RK3582 (VCCIO4 Domain)

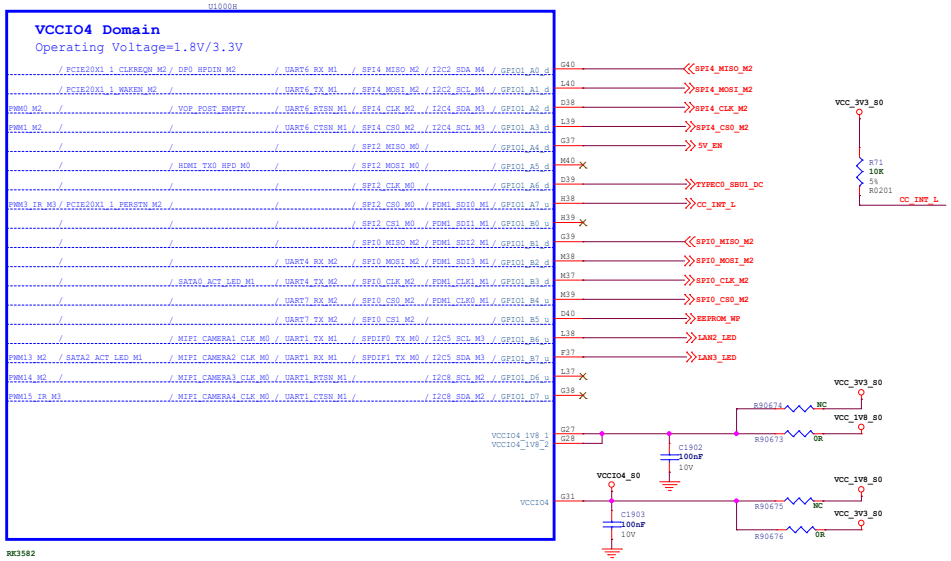

RK3582 (VCCIO6 Domain)

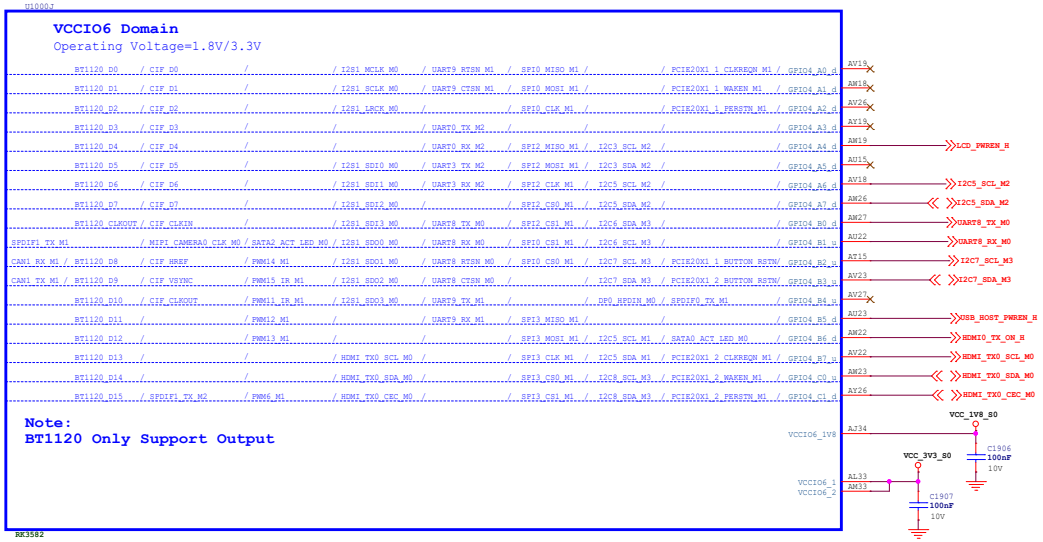

RK3582 (VCCIO5 Domain)

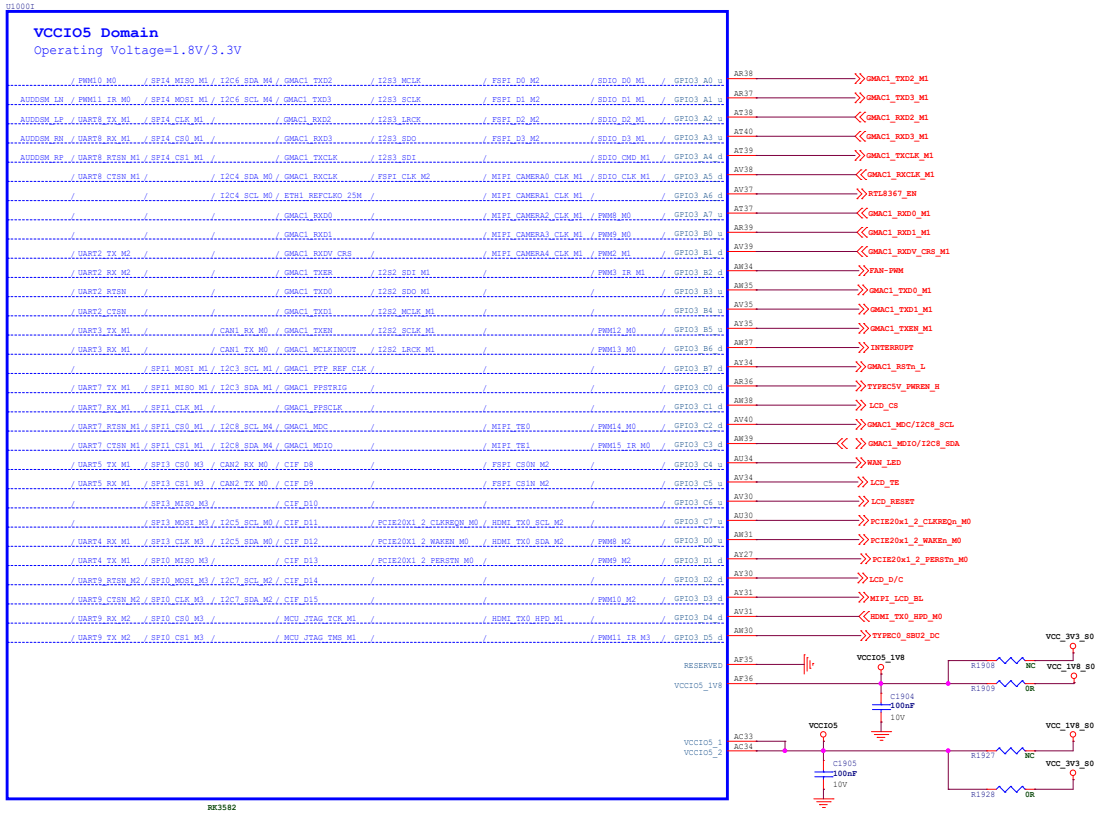

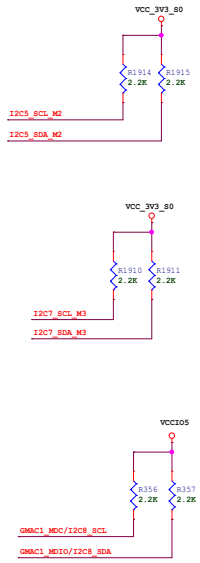

radxa

Size	Title:	E54C	REV
A2	Page Name:	RK3582 GPIO	V1.2
Date: Thursday, December 19, 2024	Sheet 11 of 26		

DRAM-LPDDR4/4x_2X32bit

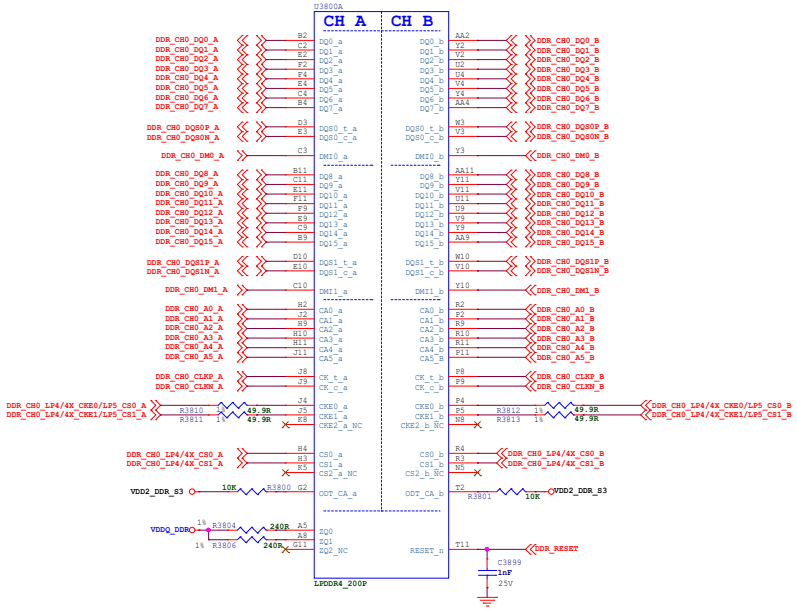

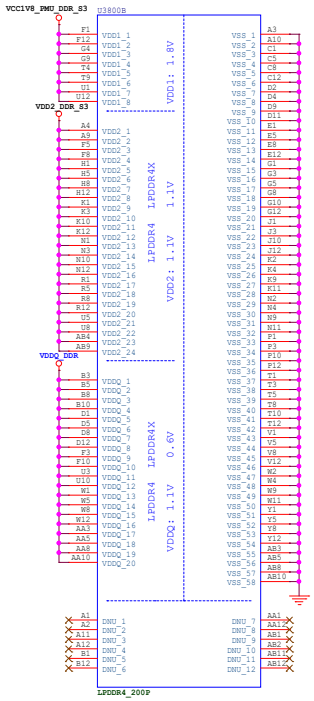

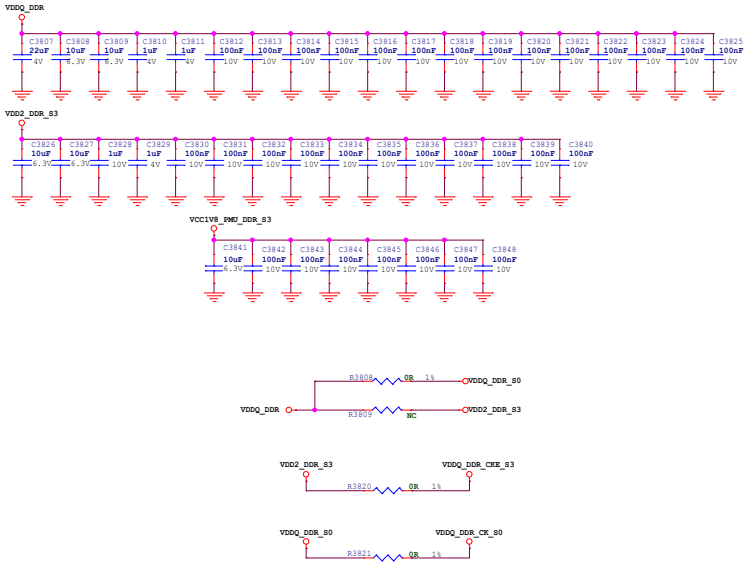

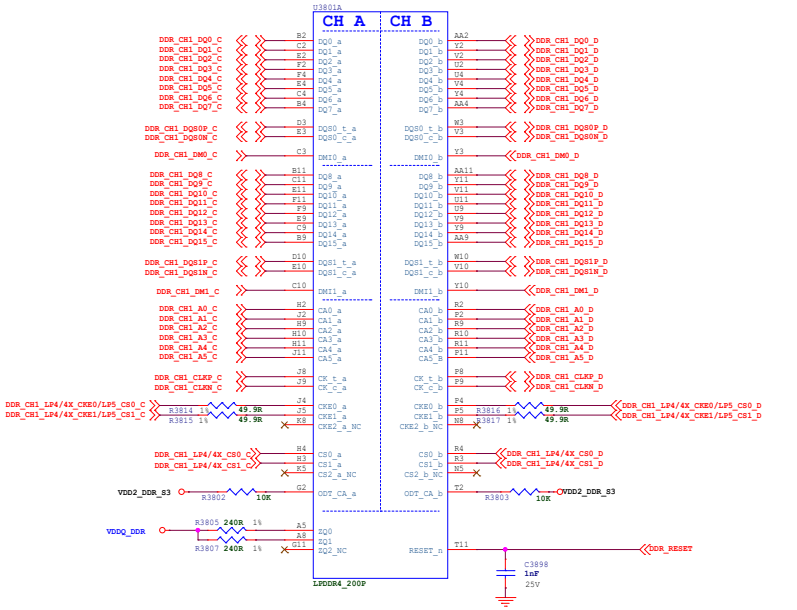

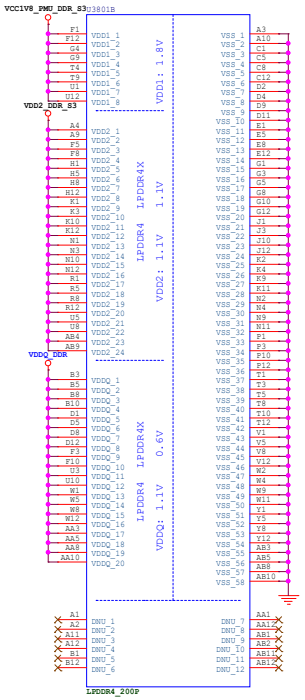

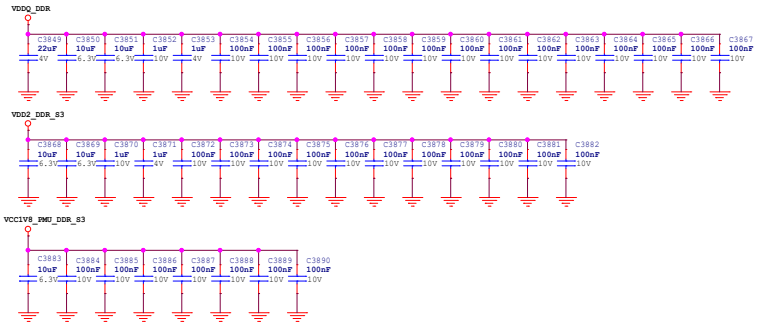

radxa

Size	Title:	REV
A2	E54C	
	Page Name: DRAM-LPDDR4/4X	V1.2
Date: Thursday, December 19, 2024	Sheet 12 of 26	

eMMC FLASH

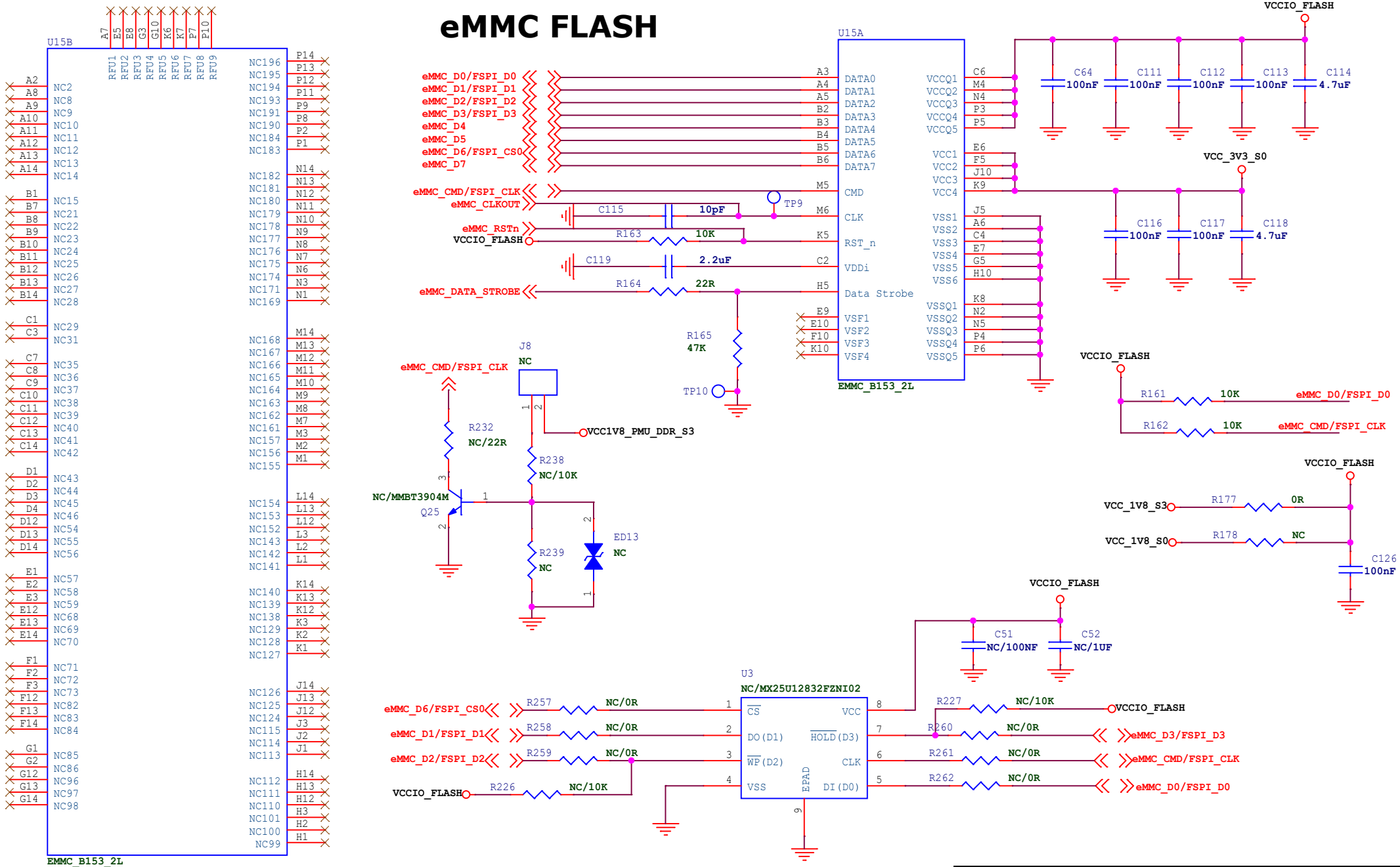

Size	Title:	E54C	REV
A4	Page Name:	EMMC/SPI	V1.2
Date: Thursday, December 19, 2024	Sheet 13 of 26		

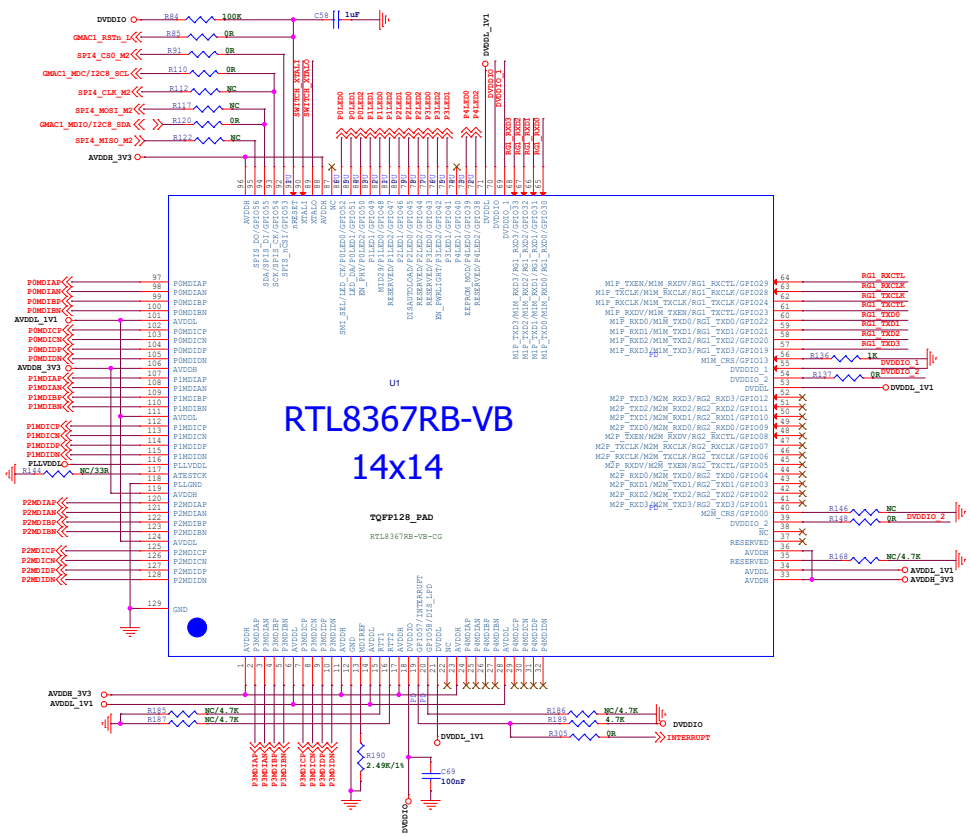

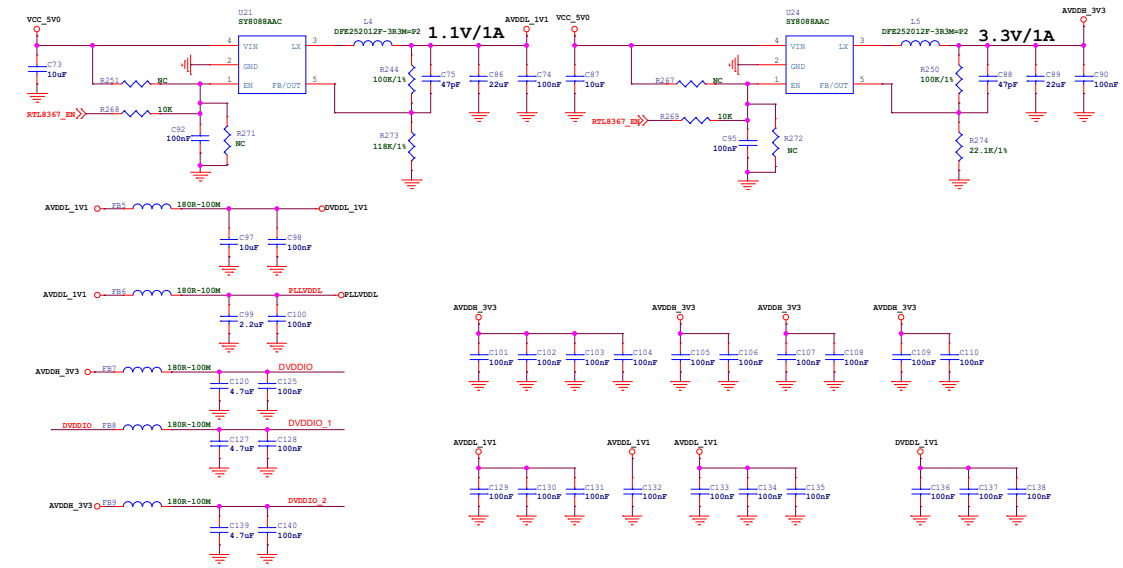

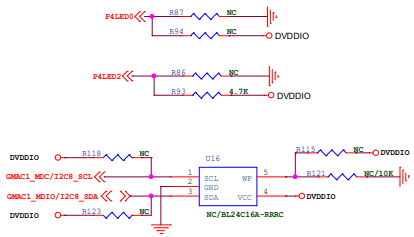

3.3V RGMII

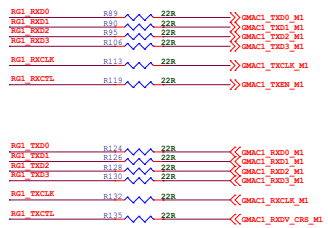

Giga PHY1

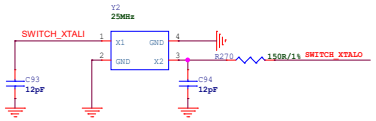

Port 0 LED

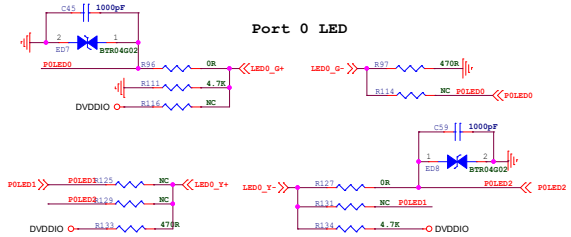

P0LED0 / SMI_SEL

** Pull Up: I2C Interface(Slave)
Pull Down: MII Management Interface(Slave)

P0LED2 / EN_PHY:

Pull Up: Enable embedded PHY

** Pull Down: Disable embedded PHY

Port 1 LED

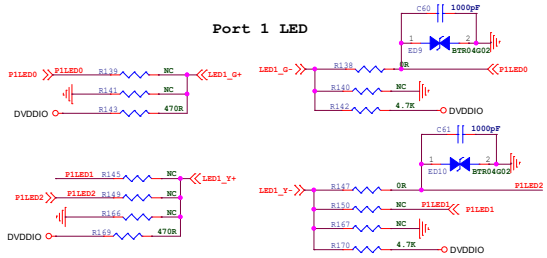

P1LED0 / MID29
Pull Up: MII Management Interface PHY ID is 29

** Pull Down: MII Management Interface PHY ID is 0

P1LED2 / RESERVED: Must Pull High or Keep Floating

Port 2 LED

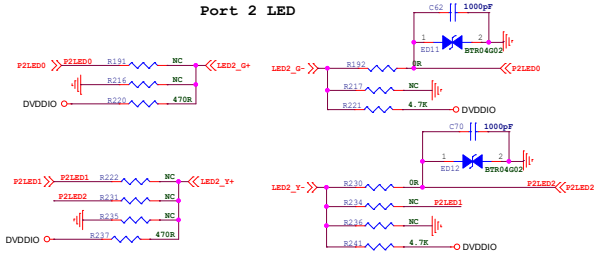

P2LED0 / DISAUTOLOAD

** Pull Low: Enable Auto load EEPROM

Pull High: Disable Auto load EEPROM

P2LED2 / DIS_8051

Pull Low: Enable 8051

** Pull High: Disable 8051

Port 3 LED

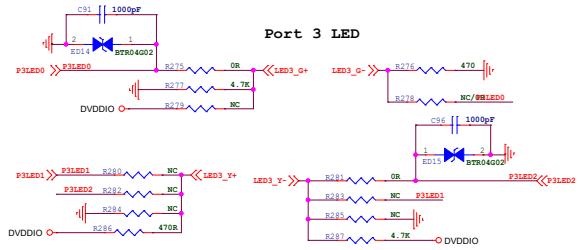

P3LED0 / RESERVED: Must Pull Low

P3LED2 / EN_PWRLIGHT:

Pull Up: Enable LED Power on Light

**Pull Down: Disable LED Power on Light

radxa

Size	Title:	REV
A2	E54C	
	Page Name: RTL8367RB	V1.2
Date: Thursday, December 19, 2024	Sheet 14 of 26	

RJ45-0

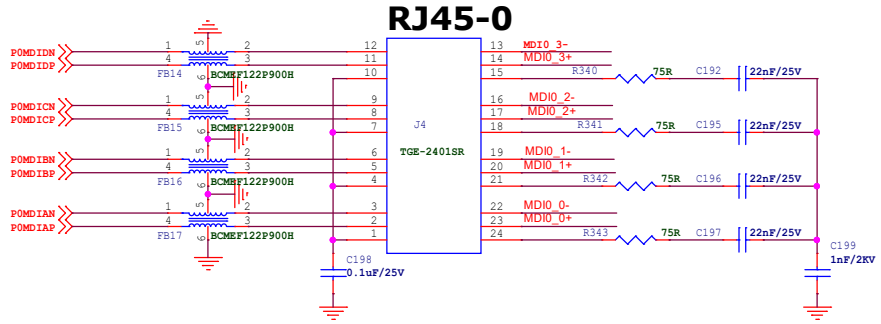

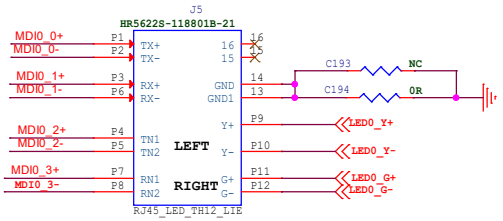

RJ45-1

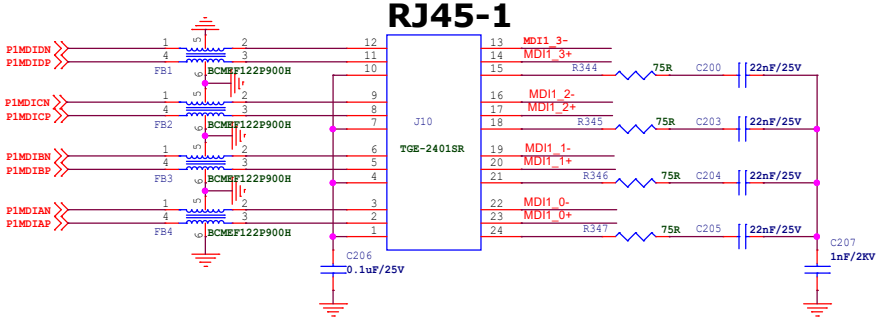

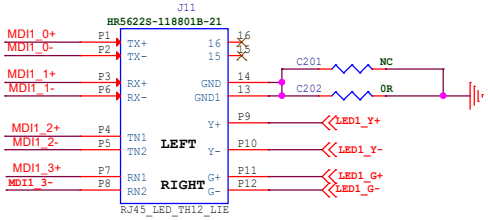

RJ45-2

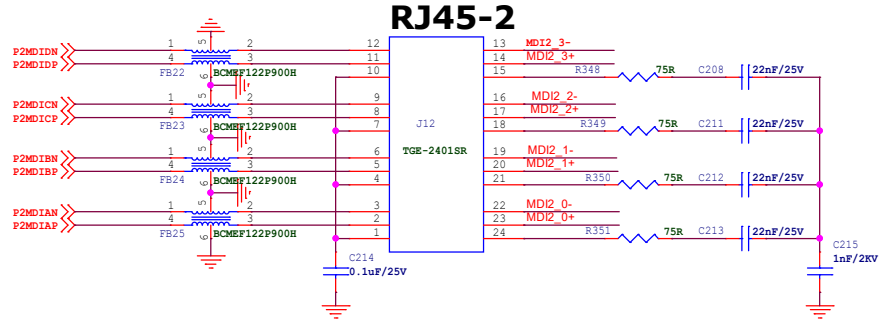

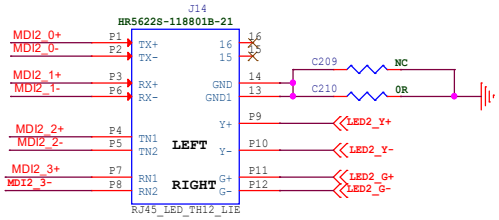

RJ45-3

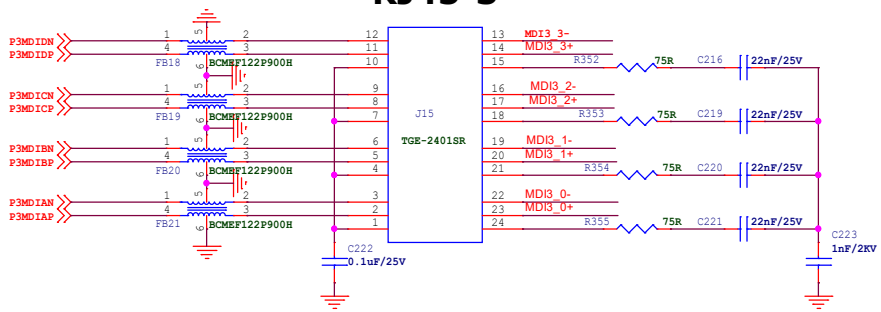

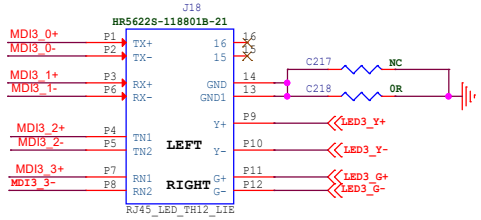

radxa

Size	Title:	E54C	REV
A3	Page Name:	RJ45	V1.2
Date: Thursday, December 19, 2024	Sheet 15 of 26		

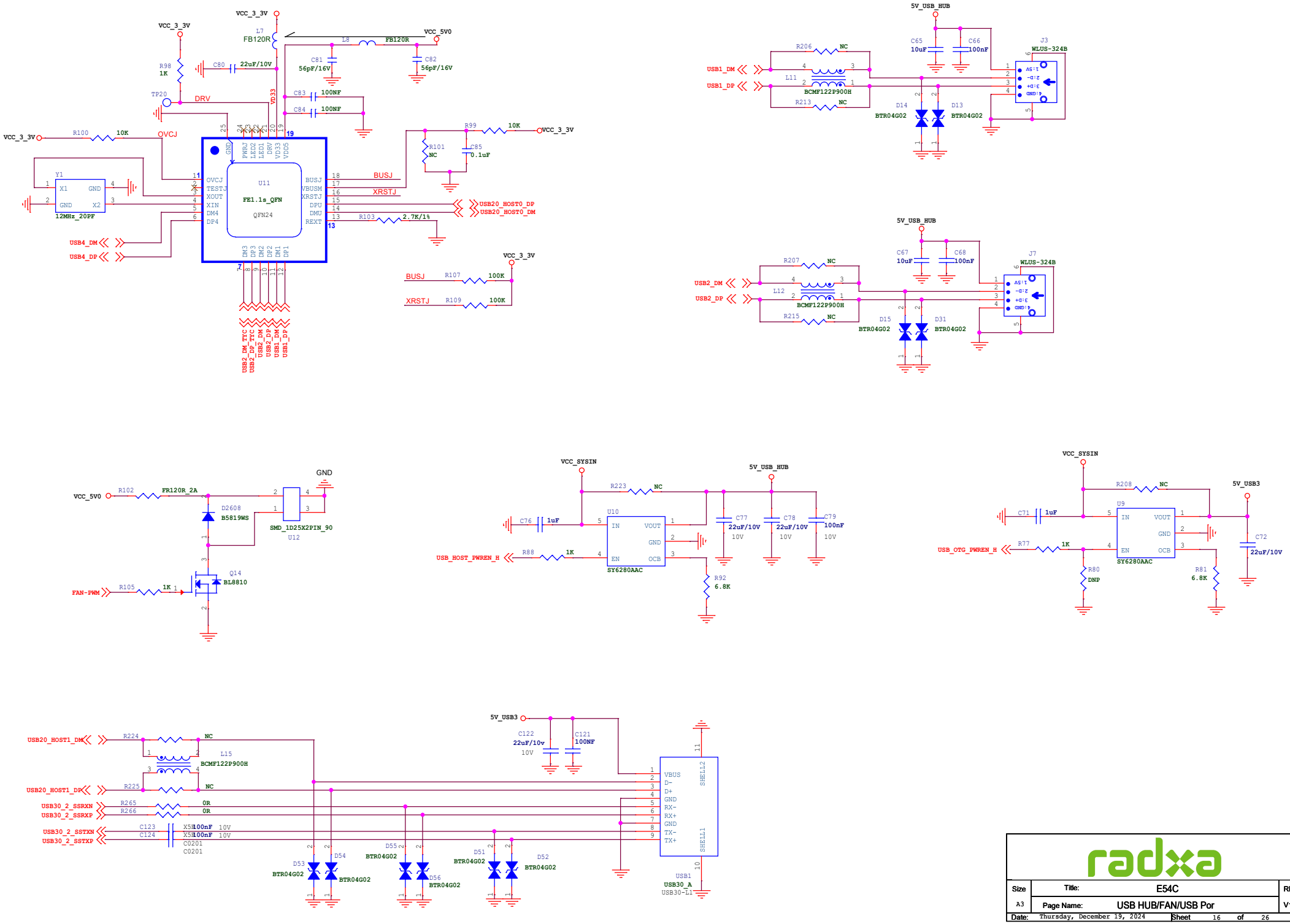
VCC_3_3V
L7
FB120R
L8
FB120R
VCC_5V0
R98
1K
C80
22uF/10V
C81
56pF/16V
C82
56pF/16V
TP20
DRV
VD33
C83
100NF
C84
100NF
R100
10K
VCJ
R99
10K
R101
NC
C85
0.1uF
Y1
X1
GND
X2
12MHz_20PF
U11
FE1.1s_QFN
QFN24
OVCJ
TESTJ
XOUT
XIN
DM4
DP4
BUSJ
VBUSM
XRSTJ
DPU
DMU
REXT
R103
2.7K/1%
USB20_HOST0_DP
USB20_HOST0_DM
USB4_DM
USB4_DP
R107
100K
R109
100K
USB2_DM_TTC
USB2_DP_TTC
USB2_DM_TW
USB2_DP_TW
USB1_DM
USB1_DP
5V_USB_HUB
R206
NC
R213
NC
L11
BCMF122P900H
USB1_DM
USB1_DP
C65
10uF
C66
100nF
J3
WLUS-324B
D14
BTR04G02
D13
BTR04G02
R207
NC
R215
NC
L12
BCMF122P900H
USB2_DM
USB2_DP
C67
10uF
C68
100nF
J7
WLUS-324B
D15
BTR04G02
D31
BTR04G02
GND
VCC_5V0
R102
FR120R_2A
D2608
B5819WS
SMD_1D25X2PIN_90
U12
FAN-PWM
R105
1K
Q14
BL8810
VCC_SYSIN
R223
NC
U10
SY6280AAC
C76
1uF
R88
1K
USB_HOST_PWREN_H
C77
22uF/10V
10V
C78
22uF/10V
10V
C79
100nF
10V
R92
6.8K
VCC_SYSIN
R208
NC
5V_USB3
U9
SY6280AAC
C71
1uF
R77
1K
USB_OTG_PWREN_H
R80
DNP
R81
6.8K
C72
22uF/10V
USB20_HOST1_DM
USB20_HOST1_DP
R224
NC
R225
NC
L15
BCMF122P900H
USB30_2_SSRXN
USB30_2_SSRXP
R265
0R
R266
0R
USB30_2_SSTXN
USB30_2_SSTXP
C123
C124
100nF
10V
C0201
5V_USB3
C122
22uF/10v
10V
C121
100NF
VBUS
D-
D+
GND
RX-
RX+
GND
TX-
TX+
SHELL2
SHELL1
USB1
USB30_A
USB30-L1
D53
BTR04G02
D54
BTR04G02
D55
BTR04G02
D56
BTR04G02
D51
BTR04G02
D52
BTR04G02
radxa
Size
A3
Title:
E54C
REV
V1.2
Page Name:
USB HUB/FAN/USB Por
Date:
Thursday, December 19, 2024
Sheet
16
of
26

HDMI2.1 TX0

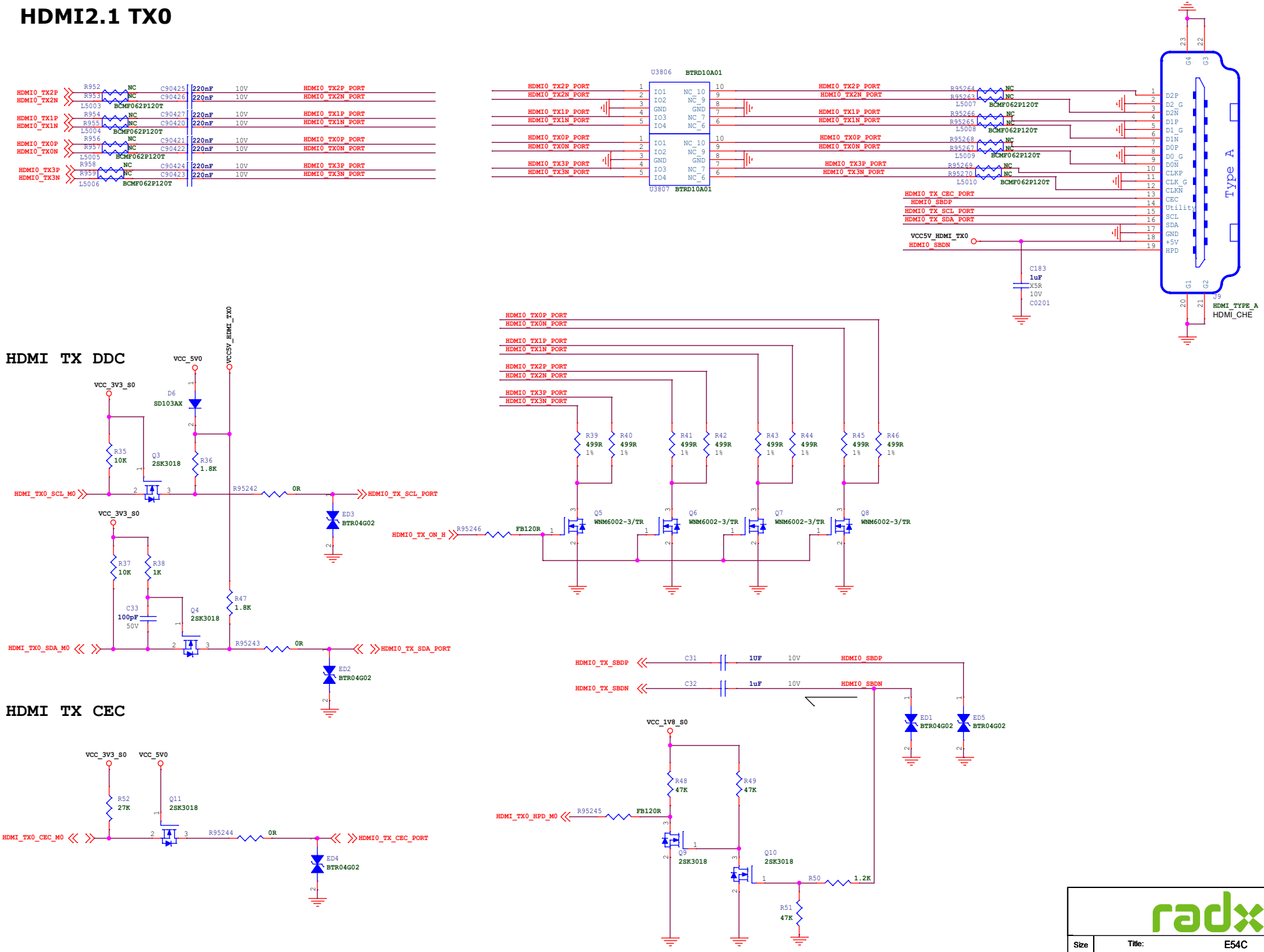

Size	Title:	E54C	REV
A3	Page Name:	HDMI 8K	V1.2
Date: Thursday, December 19, 2024	Sheet 17 of 26		

TFT

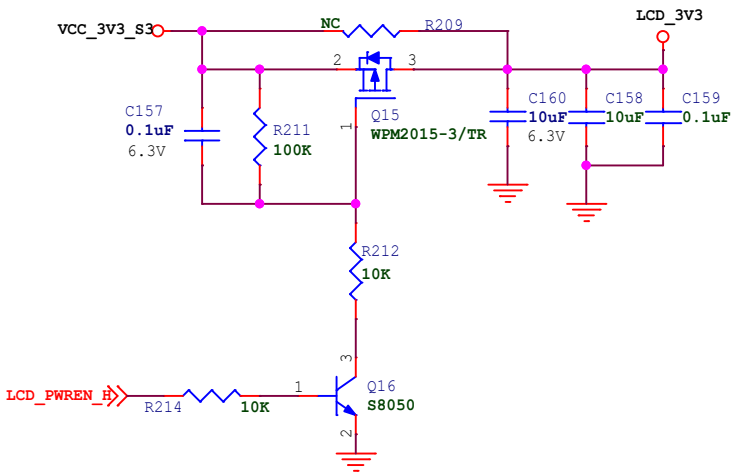

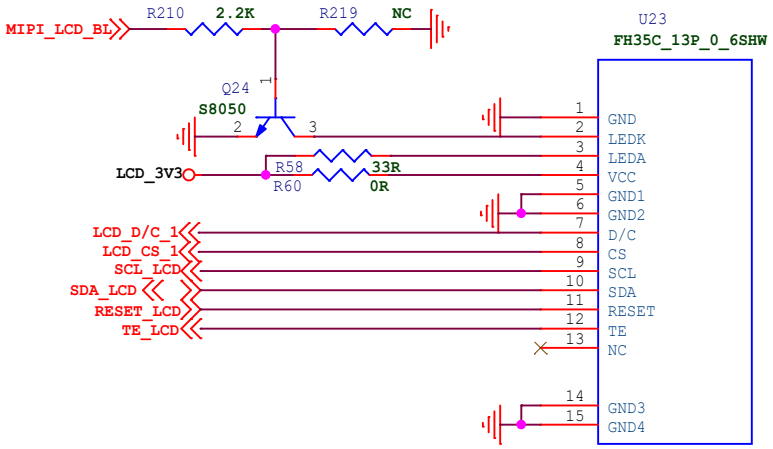

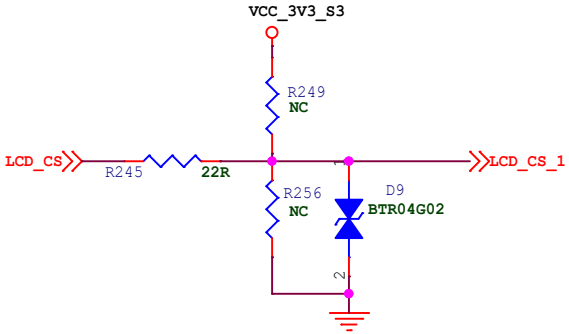

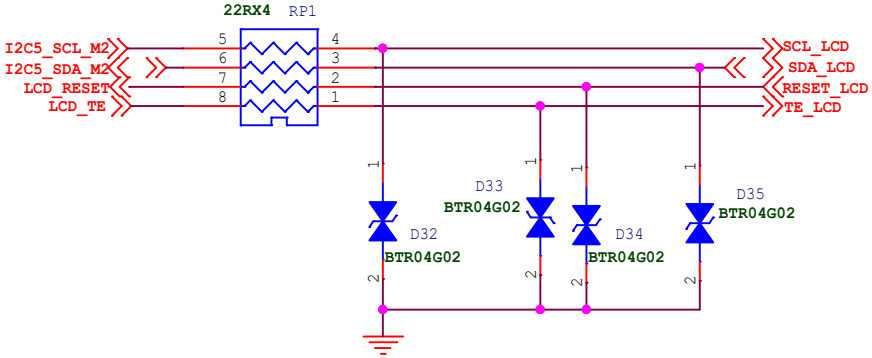

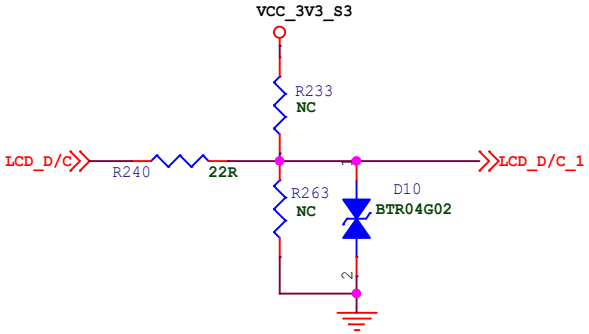

radxa

Size	Title:	E54C	REV
A4	Page Name:	TFT	V1.2
Date: Thursday, December 19, 2024	Sheet 18 of 26		

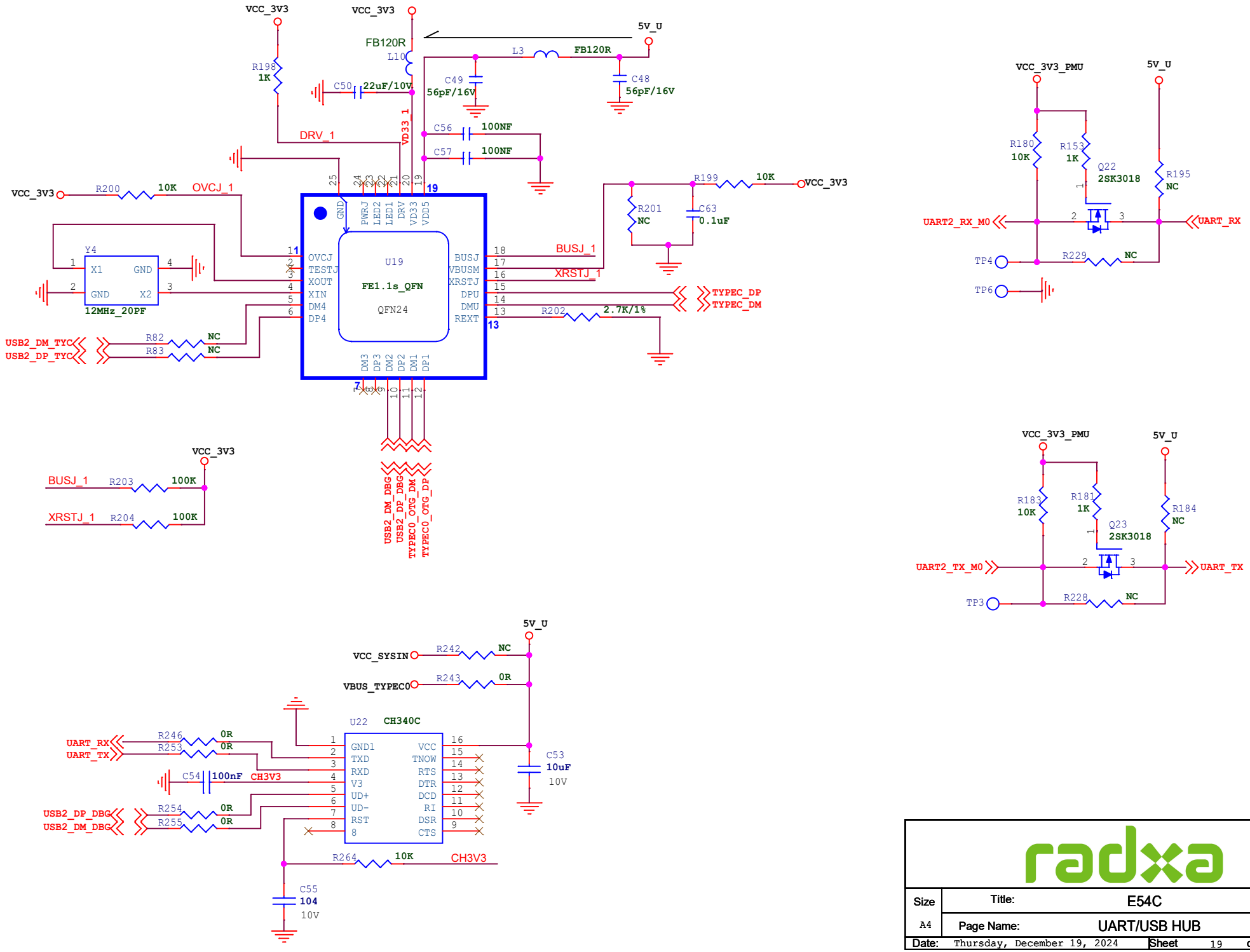

Size	Title:	E54C	REV
A4	Page Name:	UART/USB HUB	V1.2
Date: Thursday, December 19, 2024	Sheet 19 of 26		

MicroSD Card

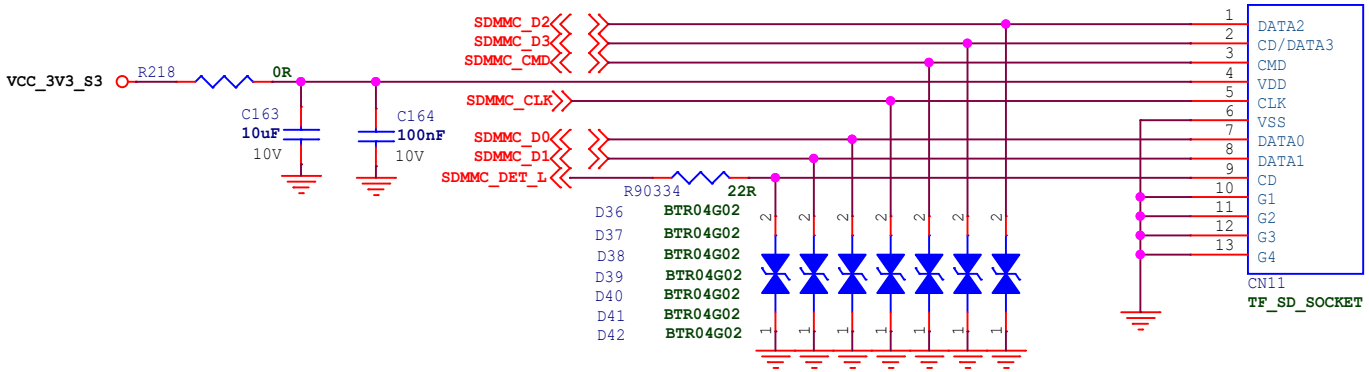

RTC IC

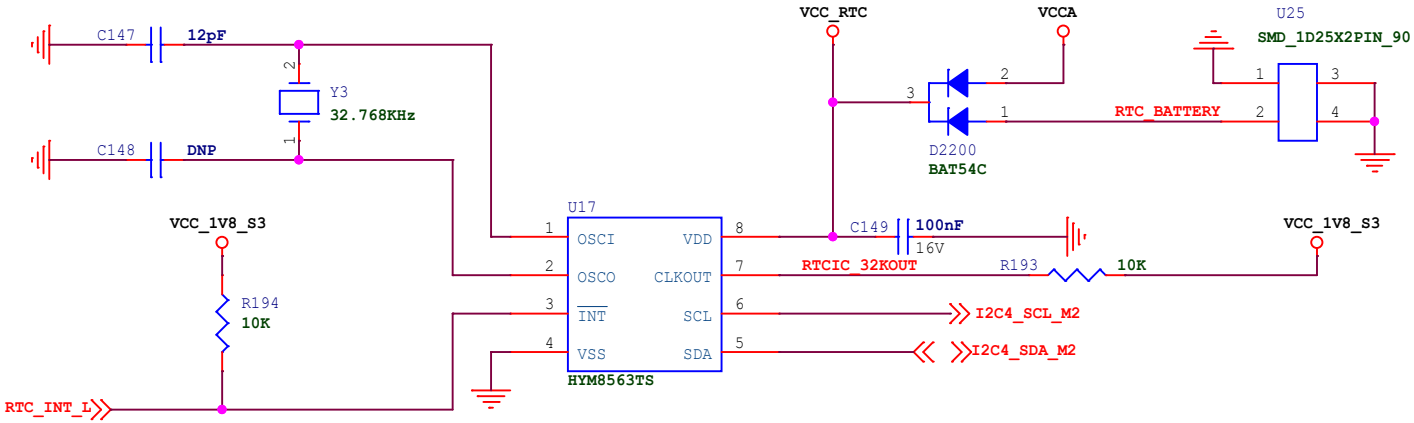

EEPROM

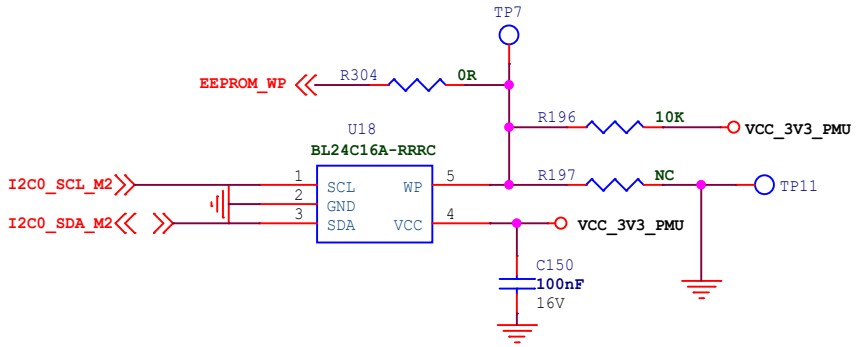

radxa

Size	Title:	E54C	REV
A4	Page Name:	TF/RTC/EEPROM	V1.2
Date: Thursday, December 19, 2024	Sheet 20 of 26		

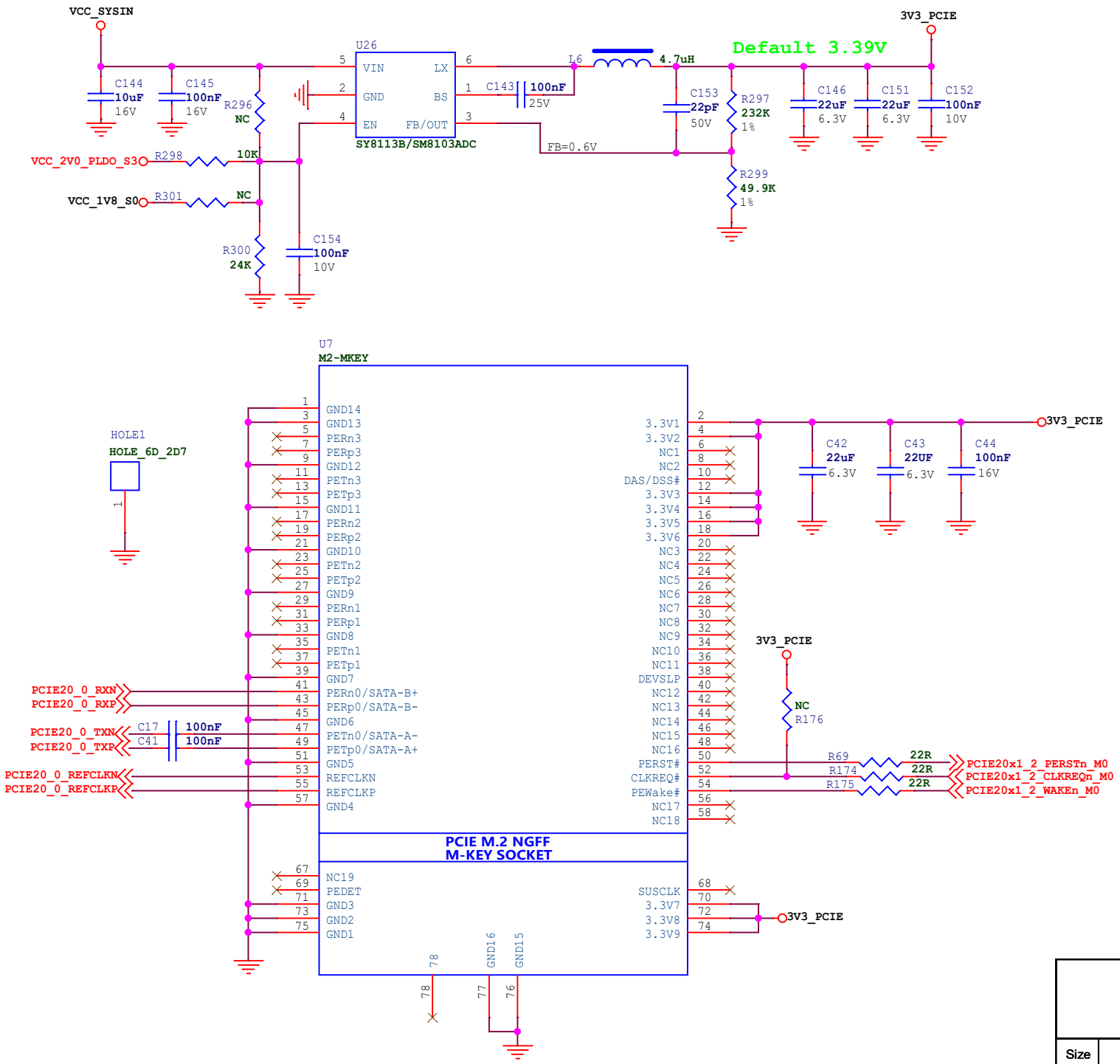

radxa

Size	Title:	E54C	REV
A4	Page Name:	M Key	V1.2
Date: Thursday, December 19, 2024	Sheet 21 of 26		

PMIC RK806-1 BUCK

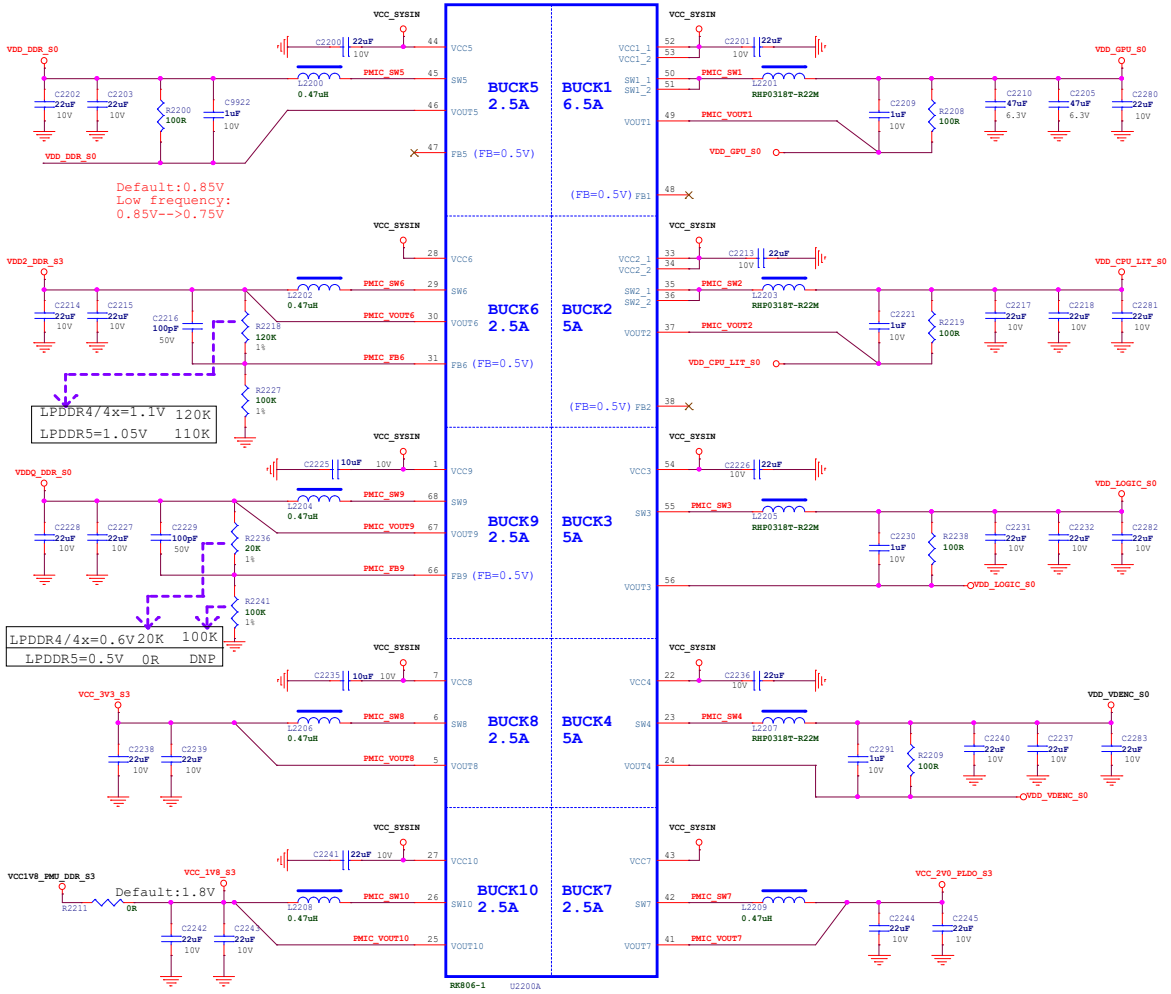

PMIC RK806-1 LDO

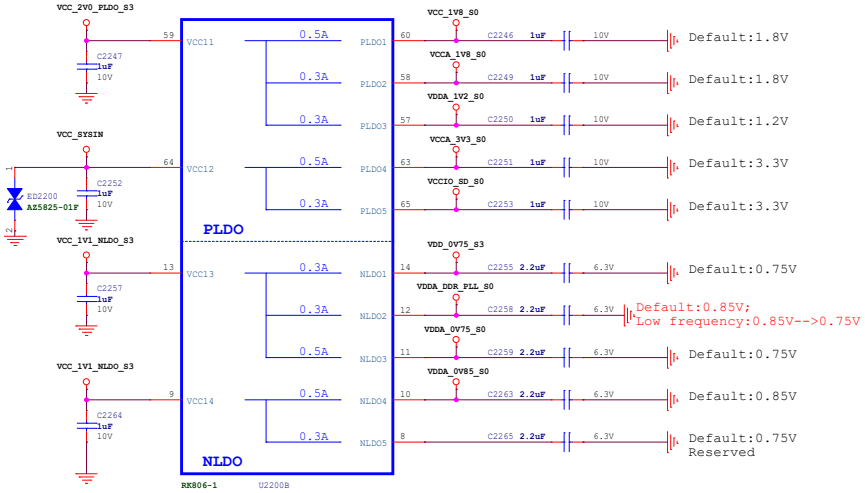

PMIC RK806-1 Managerment

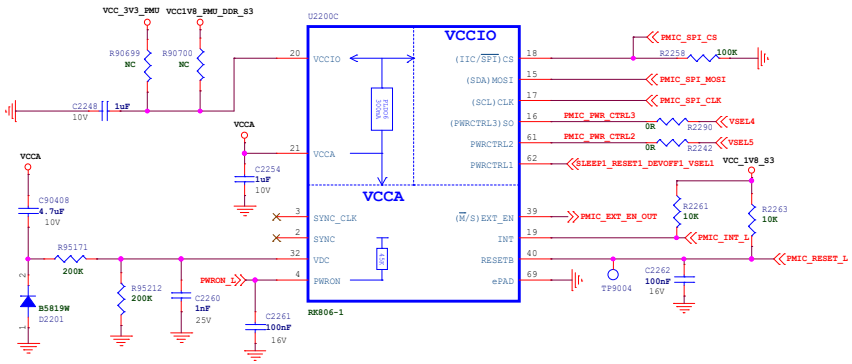

radxa

Size	Title: E54C	REV
Custom	Page Name: Power_PMIC	V1.2
Date: Thursday, December 19, 2024	Sheet 22 of 26	

VDD_CPU_BIG0

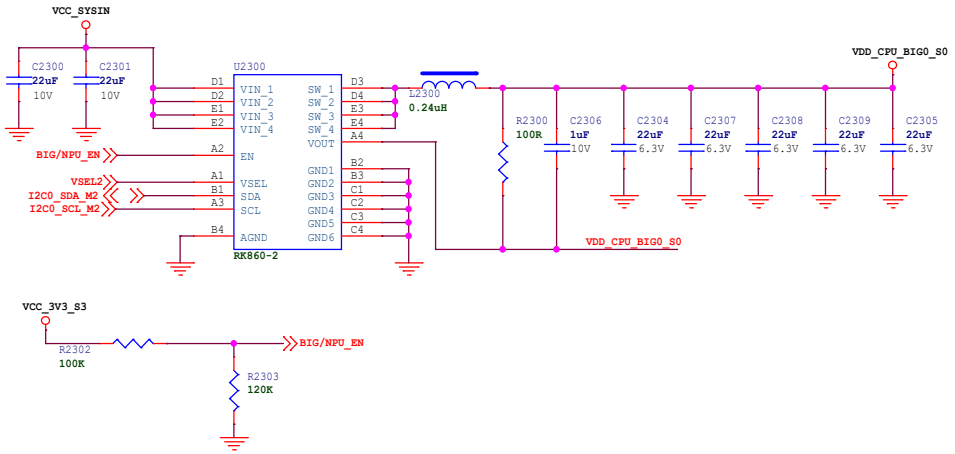

VDD_CPU_BIG1

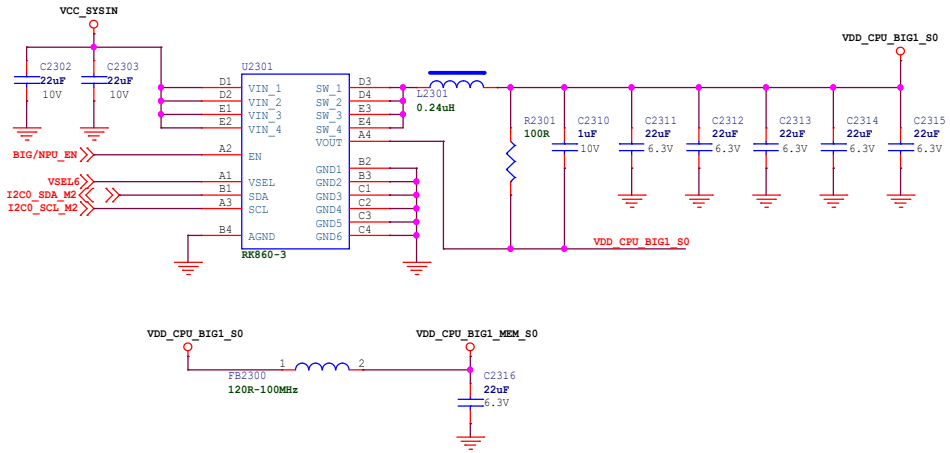

VDD_NPU

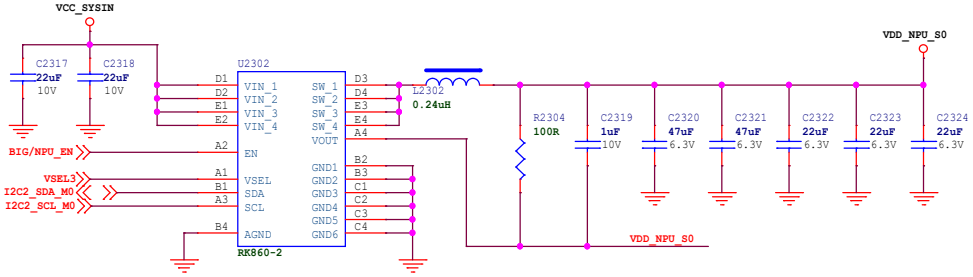

VCC_1V1_NLDO

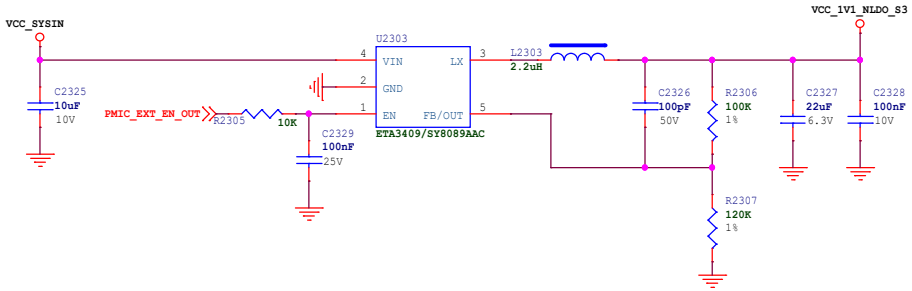

VCC_3V3_S0

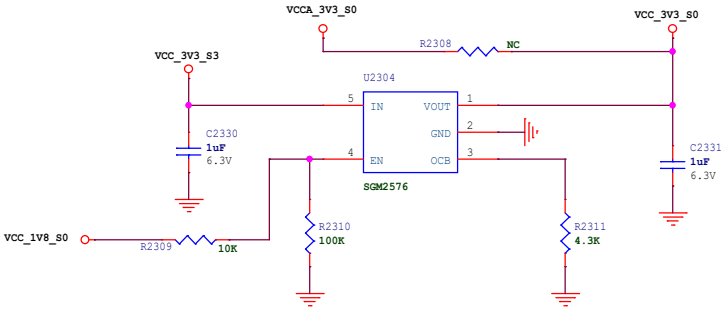

Size	Title:	E54C	REV
A3	Page Name:	Power_Ext	V1.2
Date: Thursday, December 19, 2024	Sheet 23 of 26		

DC12V

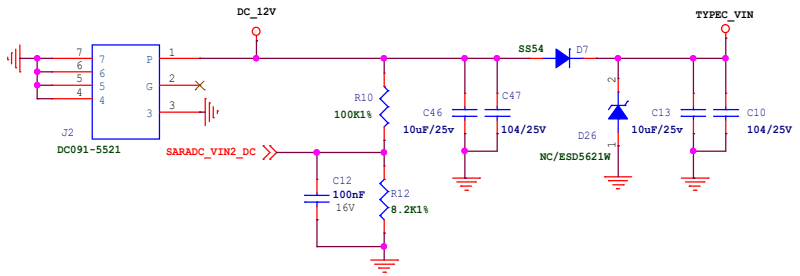

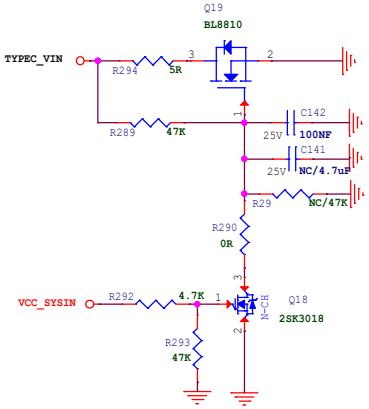

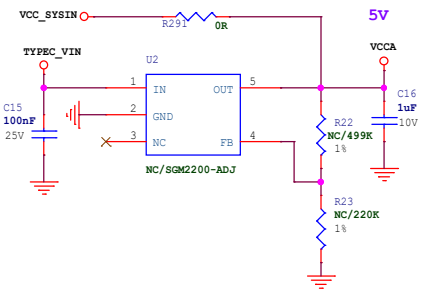

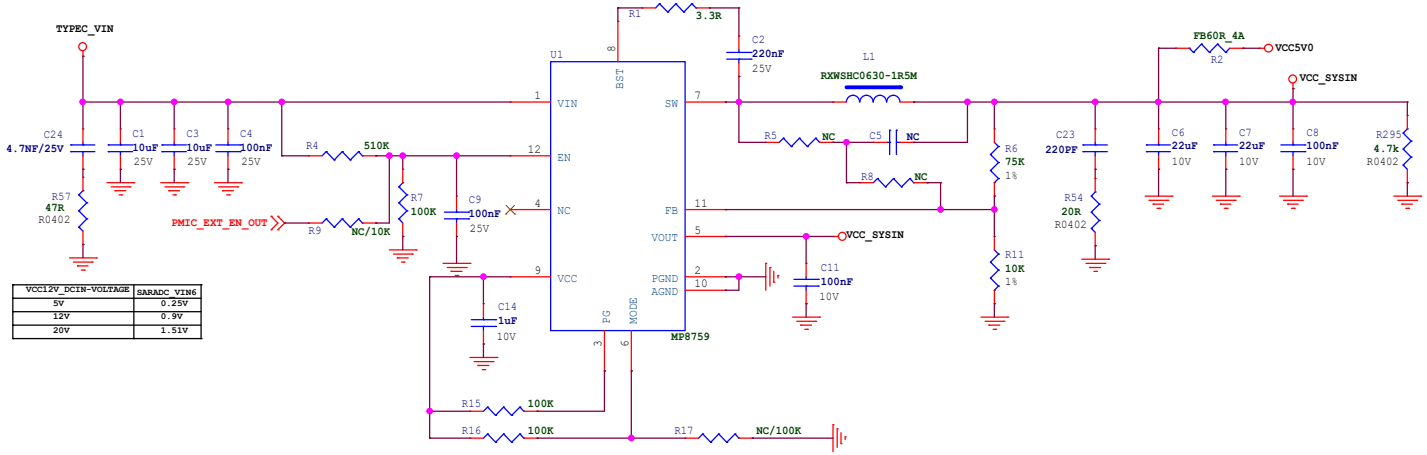

VCC12V_DCIN-VOLTAGE	SARADC_VIN6
5V	0.25V
12V	0.9V
20V	1.51V

VCC_5V0

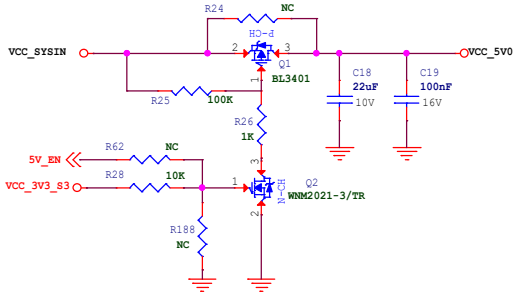

radxa

Size	Title:	E54C	REV
A3	Page Name:	Power_DC IN	V1.2
Date: Thursday, December 19, 2024	Sheet 24 of 26		

Type-C PORT

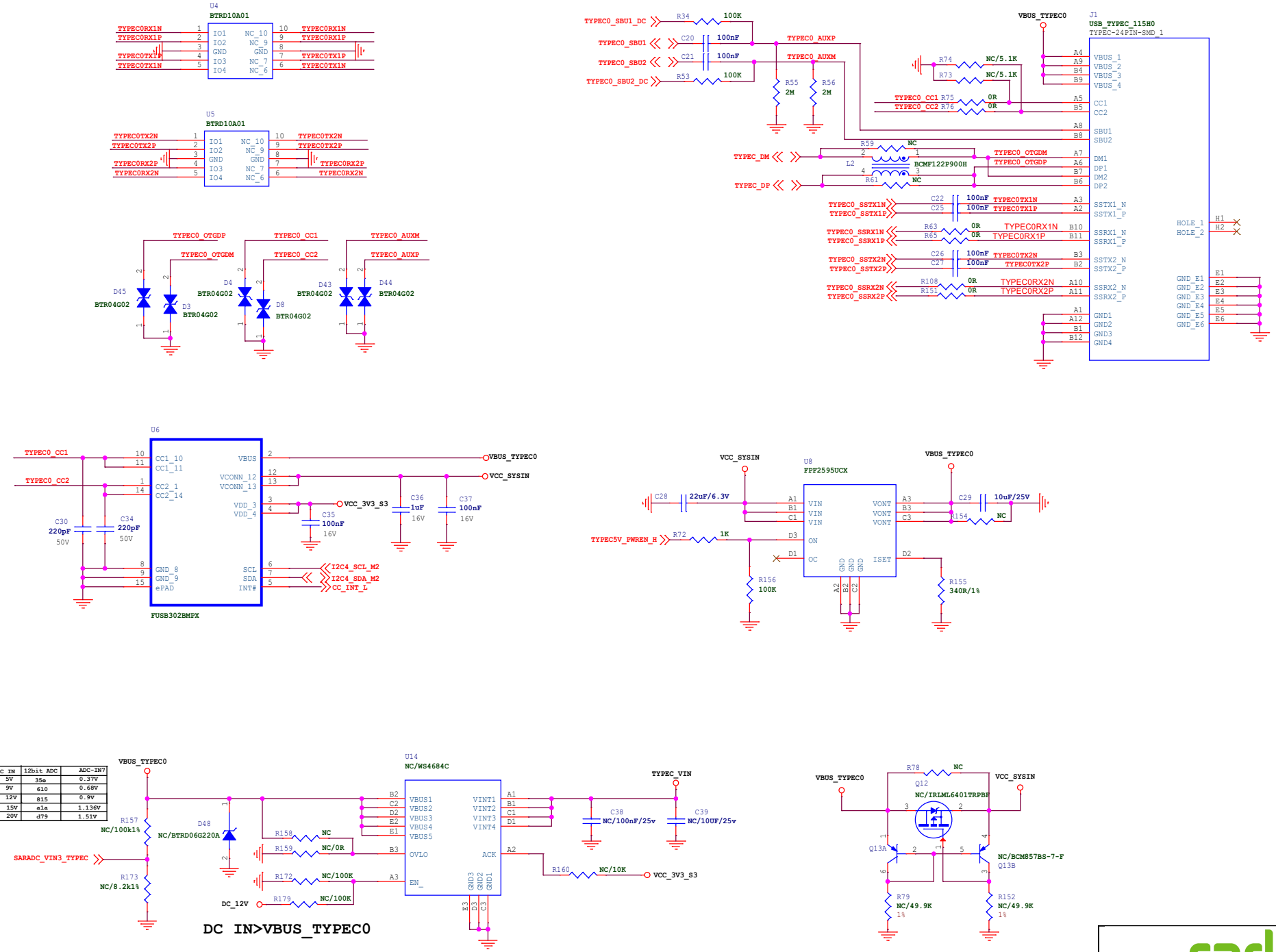

Size	Title:	E54C	REV
A3	Page Name:	Type-C Port	V1.2
Date:	Thursday, December 19, 2024	Sheet 25 of 26	

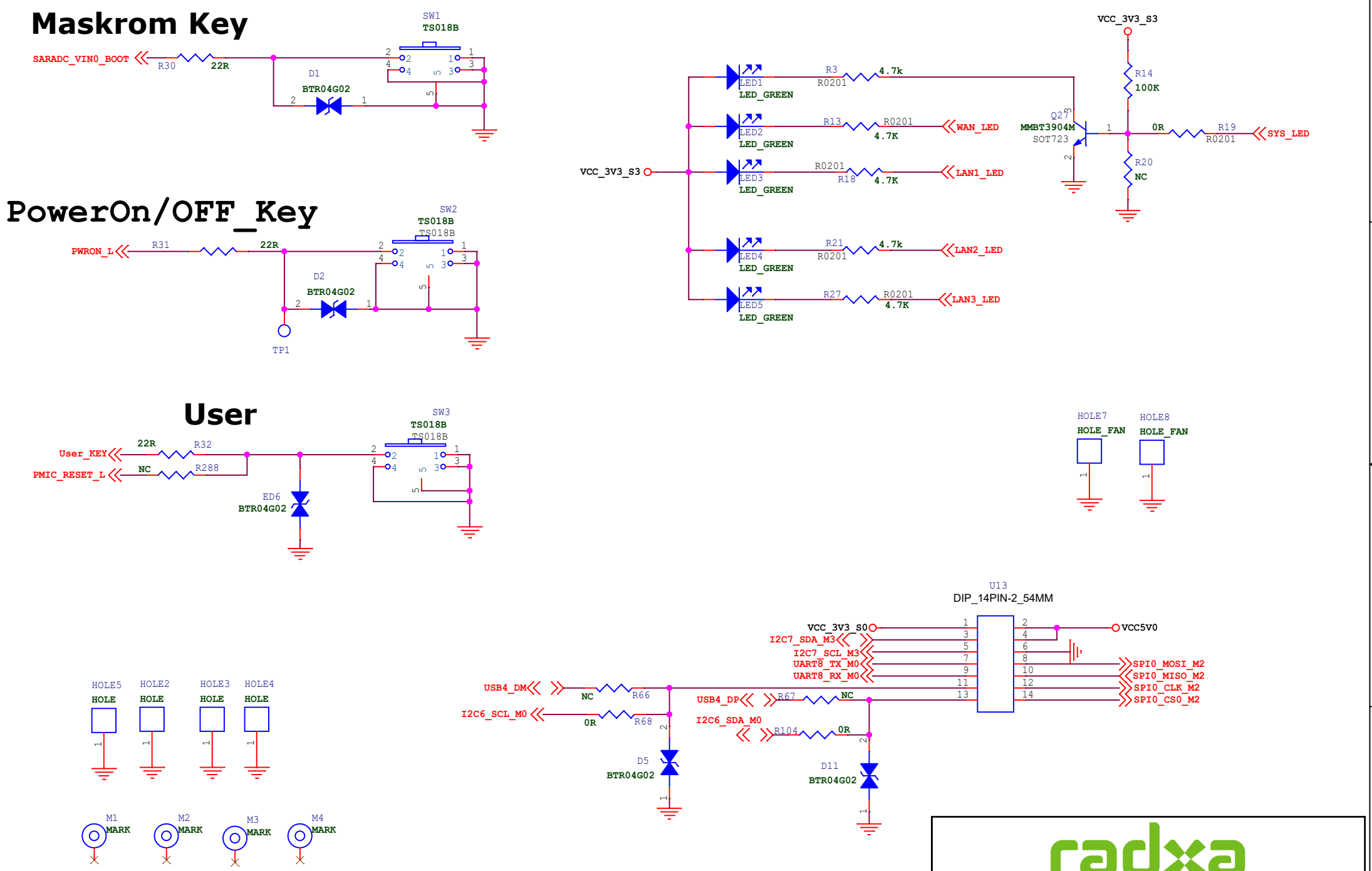

radxa

Size	Title:	E54C	REV
A4	Page Name:	HOLE/KEY/LED/Connect	V1.2
Date: Thursday, December 19, 2024	Sheet 26 of 26		