radxa®

Radxa Orion O6N Schematic

V1.11

TABLE OF CONTENTS

SHEET NO.	SHEET NAME	SHEET NO.	SHEET NAME
1	01 Cover	46	46 I2C/BOARD ID
2	02.INDEX		
3	03 BLOCK DIAGRAM		
4	04 SKY1 PCIE I/F		
5	05 SKY1 LPDDR I/F		
6	06 SKY1 DP/MIPI/GMAC I/F		
7	07 SKY1 I2C/JTAG/GPIO/MISC		
8	08 SKY1 CLK/I2S/HDA/UART/SPI		
9	09 SKY1 USB		
10	10 SKY1 POWER1		
11	11 SKY1 POWER2		
12	12 SKY1 GND		
13	13 UART DEBUG		
14	14 LPDDR5 DRAM (PHY 0/1)		
15	15 LPDDR5 DRAM (PHY 2/3)		
16	16 USB_TO_UFS		
17	17 DP4		
18	18 M.2 SSD		
19	19 M.2 WLAN/BT		
20	20 40PIN_CONN		
21	21.DP to HDMI		
22	22 PCIE 2.5G_Ethernet_1		
23	23 PCIE 2.5G_Ethernet_2		
24	24 M KEY		
25	25 USB-C_PD		
26	26 B KEY		
27	27 USB-3.0		
28	28 USB2.0		
29	29 CAMERA		
30	30 FAN CON		
31	31 TPM		
32	32 SPI-ROM		
33	33 Power Sequence		
34	34 VCORE_DRMOS		
35	35 VCORE_CONTROLLER		
36	36 SYS +5V_S5/SYS +3.3V_DS5		
37	37 SYS +1.8V_S5		
38	38 +3.3V_LDO/ SOC LDO		
39	39 +0.75V_S5		
40	40 LPDDR5 VDDQ/VDD1/VDD2		
41	41+0.86V_S0/+0.75V_DDRPHY		
42	42 SYS +12V		
43	43 LOAD SWITCH		
44	44 Discharge		
45	45 LED_KEY		

radxa

Size	Title:	RS602	REV
A3	Page Name:	02.INDEX	V1.11
Date:	Thursday, November 20, 2025	Sheet 02 of 46	

RS602 Block Diagram

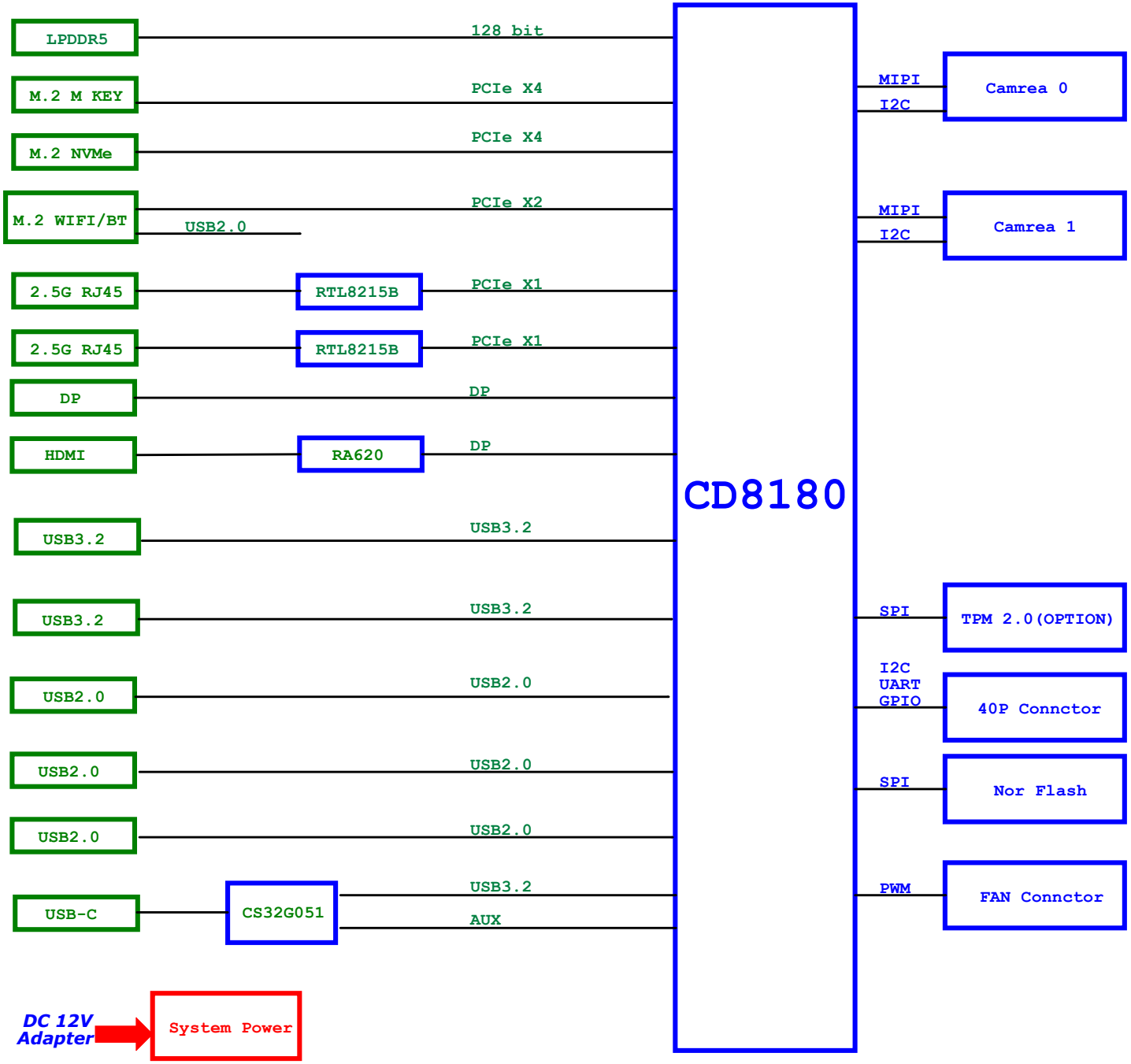

Size	Title:	RS602	REV
C	Page Name:	03 BLOCK DIAGRAM	V1.11
Date: Thursday, November 20, 2025	Sheet 03 of 46		

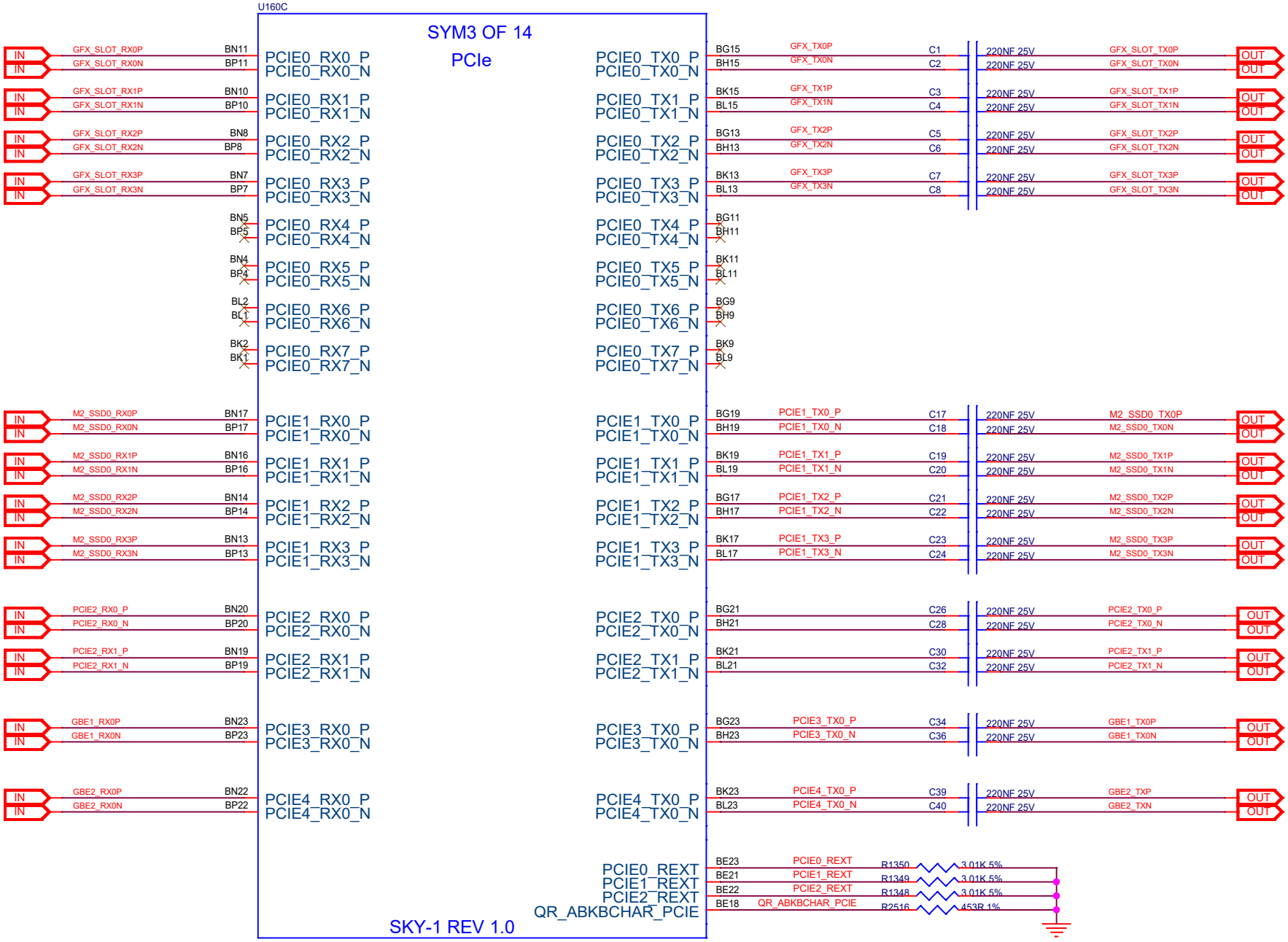

radxa

Size	Title:	RS602	REV
A4	Page Name:	04 SKY1 PCIE I/F	V1.11
Date:	Thursday, November 20, 2025	Sheet 04 of 46	

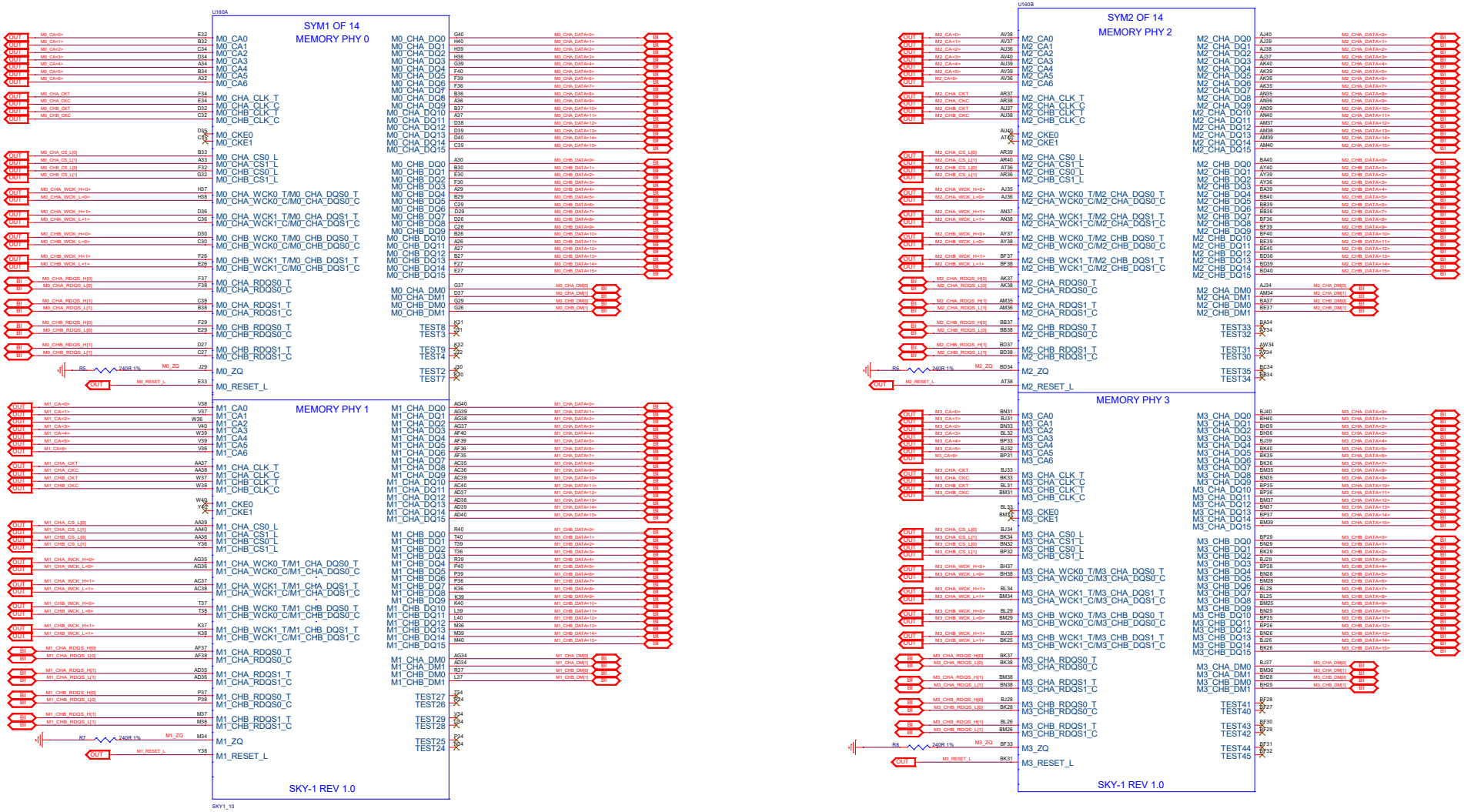

radxa

Size	Title: RS602	REV
Custom	Page Name: 05 SKY1 LPDDR I/F	v1.11
Date: Thursday, November 20, 2025	Sheet 05 of 46	

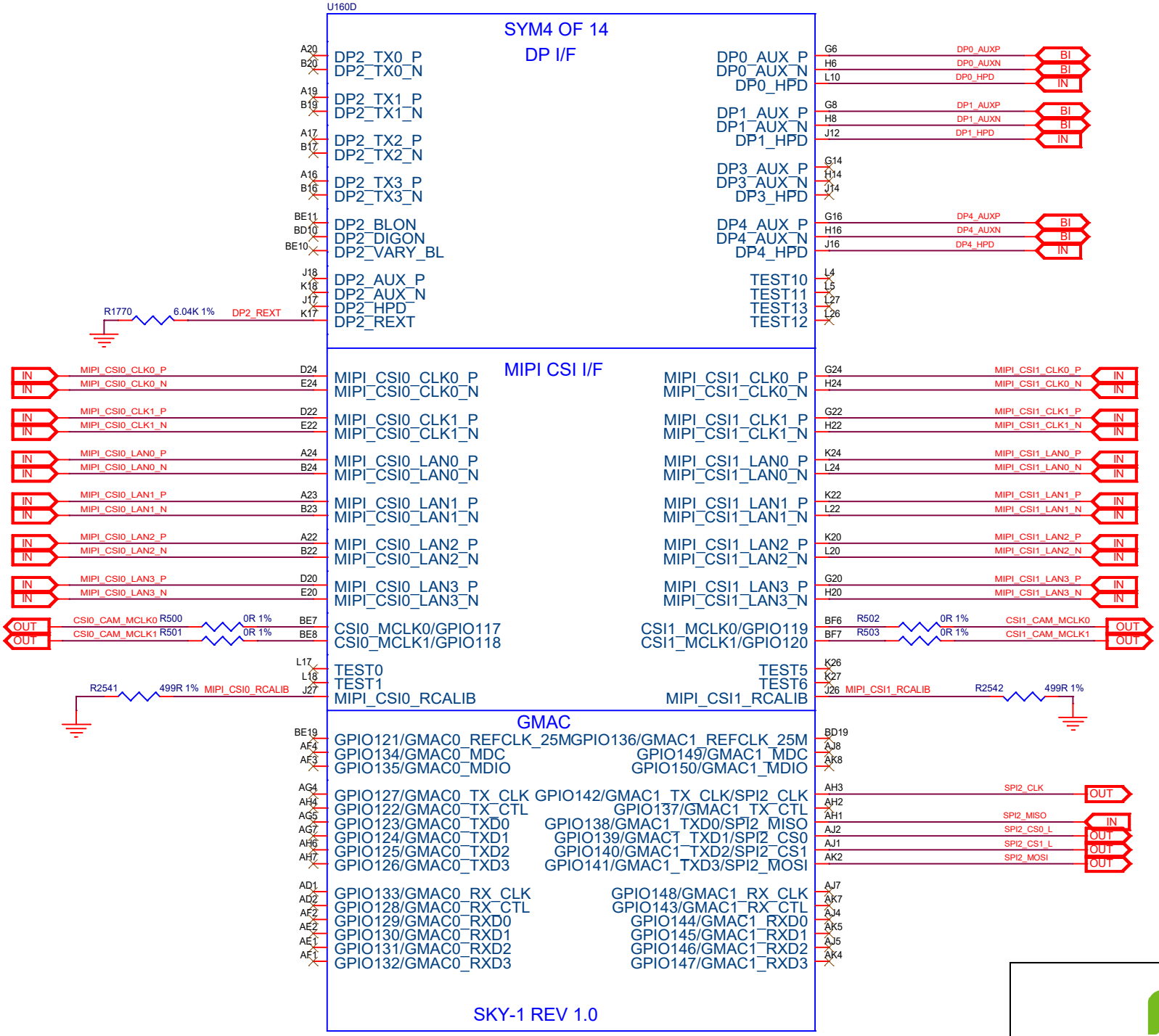

radxa

Size	Title:	RS602	REV
A4	Page Name:	06 SKY1 DP/MIPI/GMAC I/F	V1.11
Date: Thursday, November 20, 2025	Sheet 06 of 46		

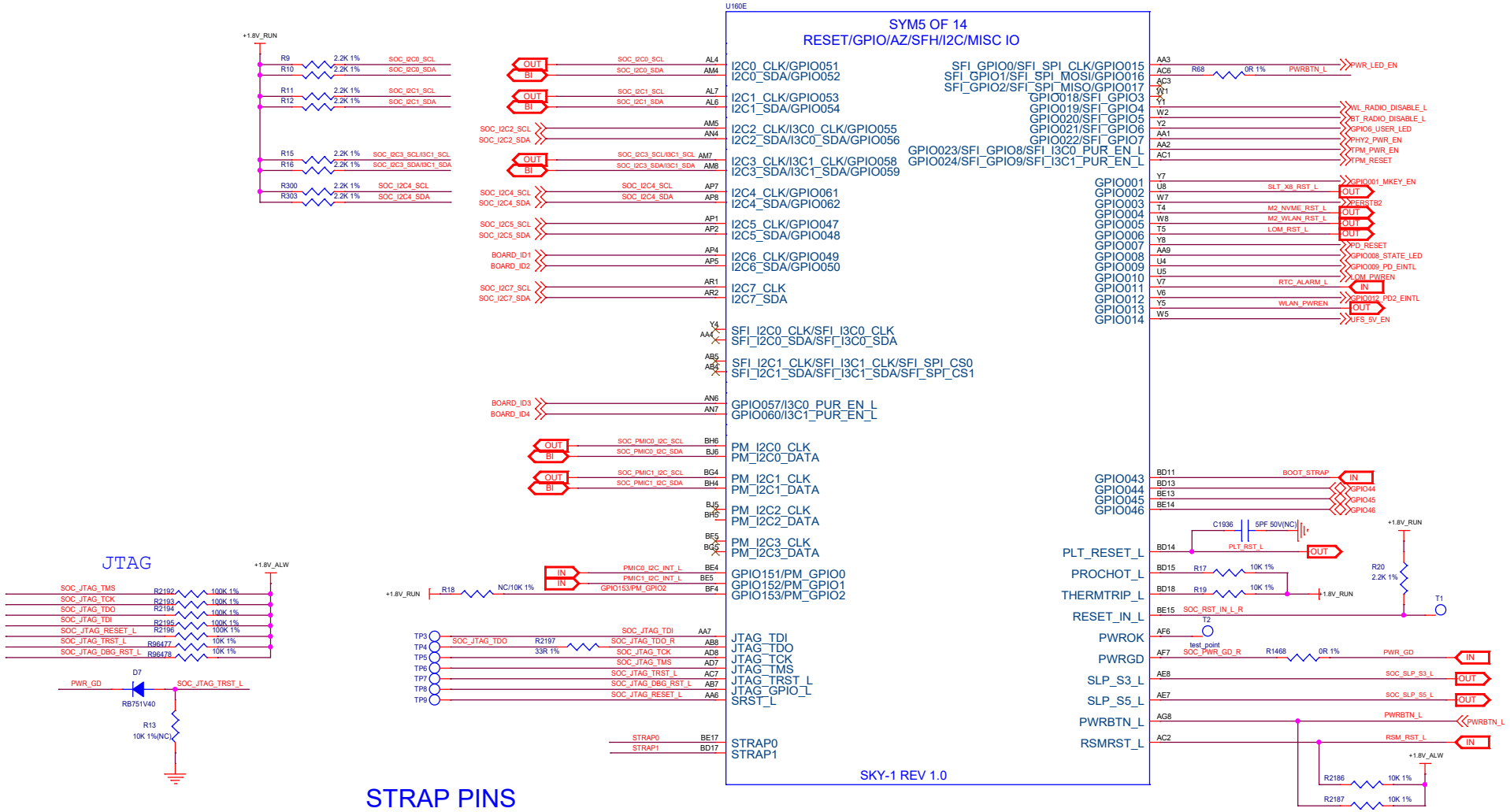

STRAP [1:0]	BOOT SOURCE
00/01	BOOT ROM
10	SPI FLASH
11	SRAM

BOOT STRAP GPIO043	
1	NORMAL BOOT
0	FAST BOOT

radxa

Size	Title:	RS602	REV
A3	Page Name:	07 SKY1 I2C/JTAG/GPIO/MISC	V1.11
Date: Thursday, November 20, 2025	Sheet 07 of 46		

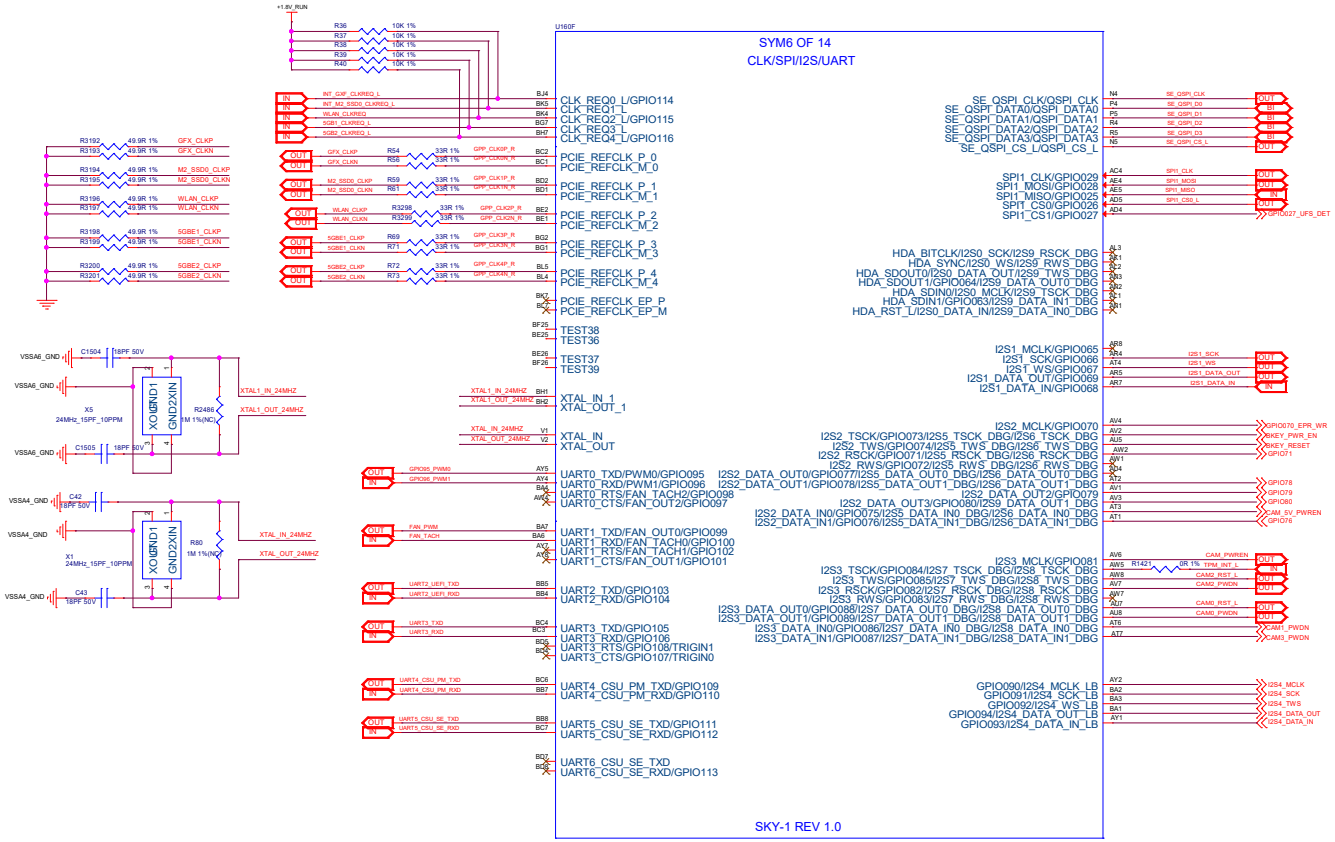

RTC

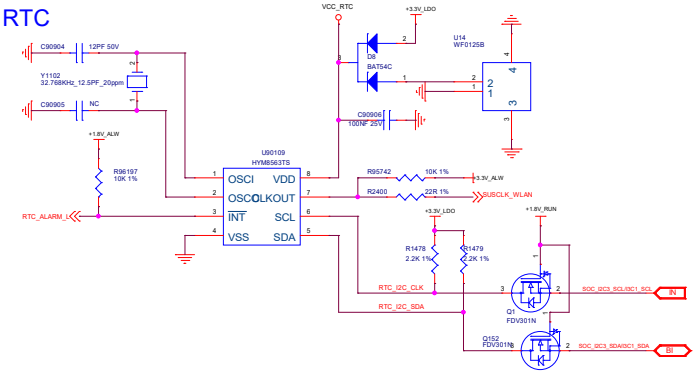

Size	Title: RS602		REV
Custom	Page Name: 08 SKY1 CLK/I2S/HDA/UART/SPI		V1.11
Date: Thursday, November 20, 2025	Sheet 08 of 46		

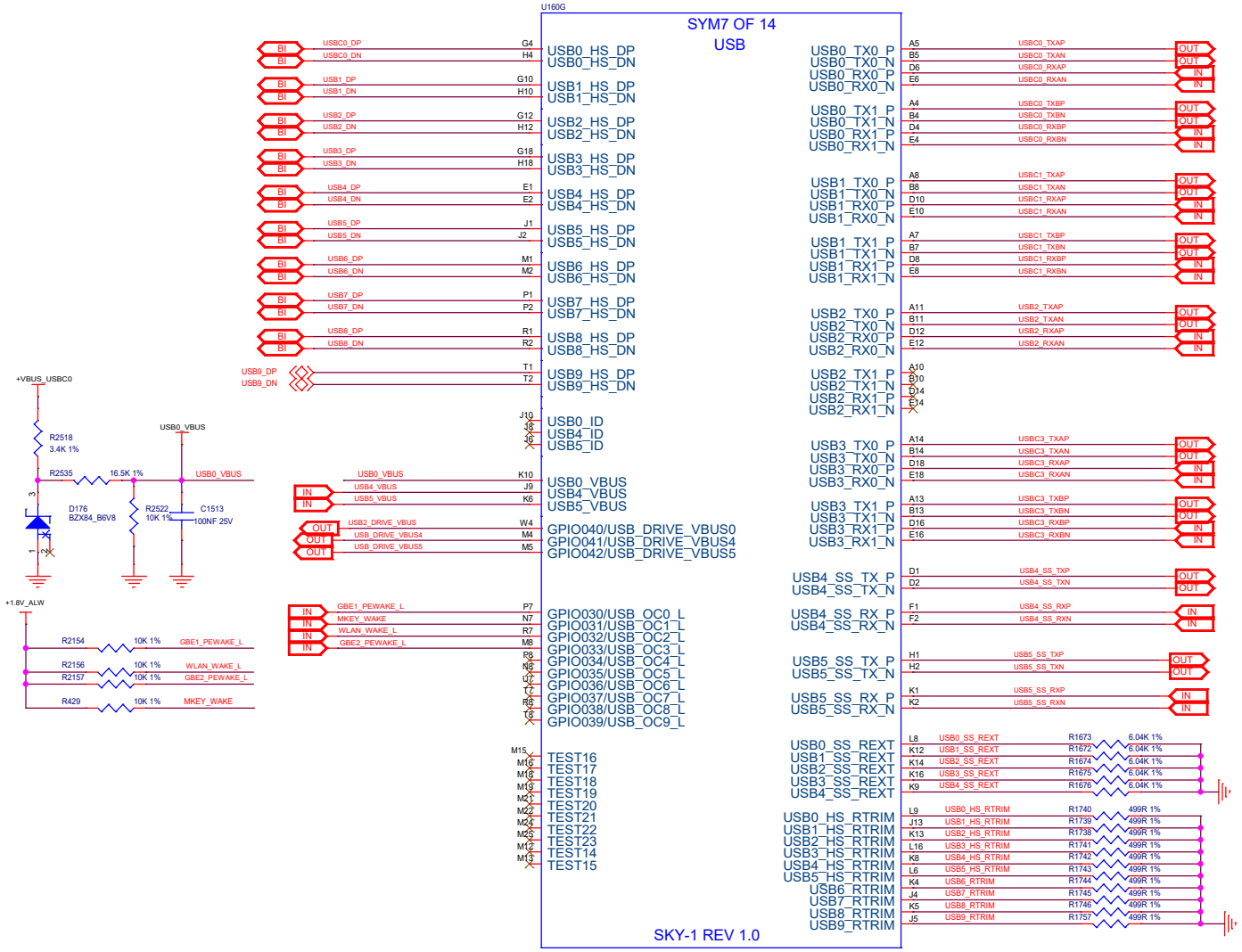

Size	Title:	REV
A3	Page Name: 09 SKY1 USB	V1.11
Date: Thursday, November 20, 2025	Sheet 09 of 46	

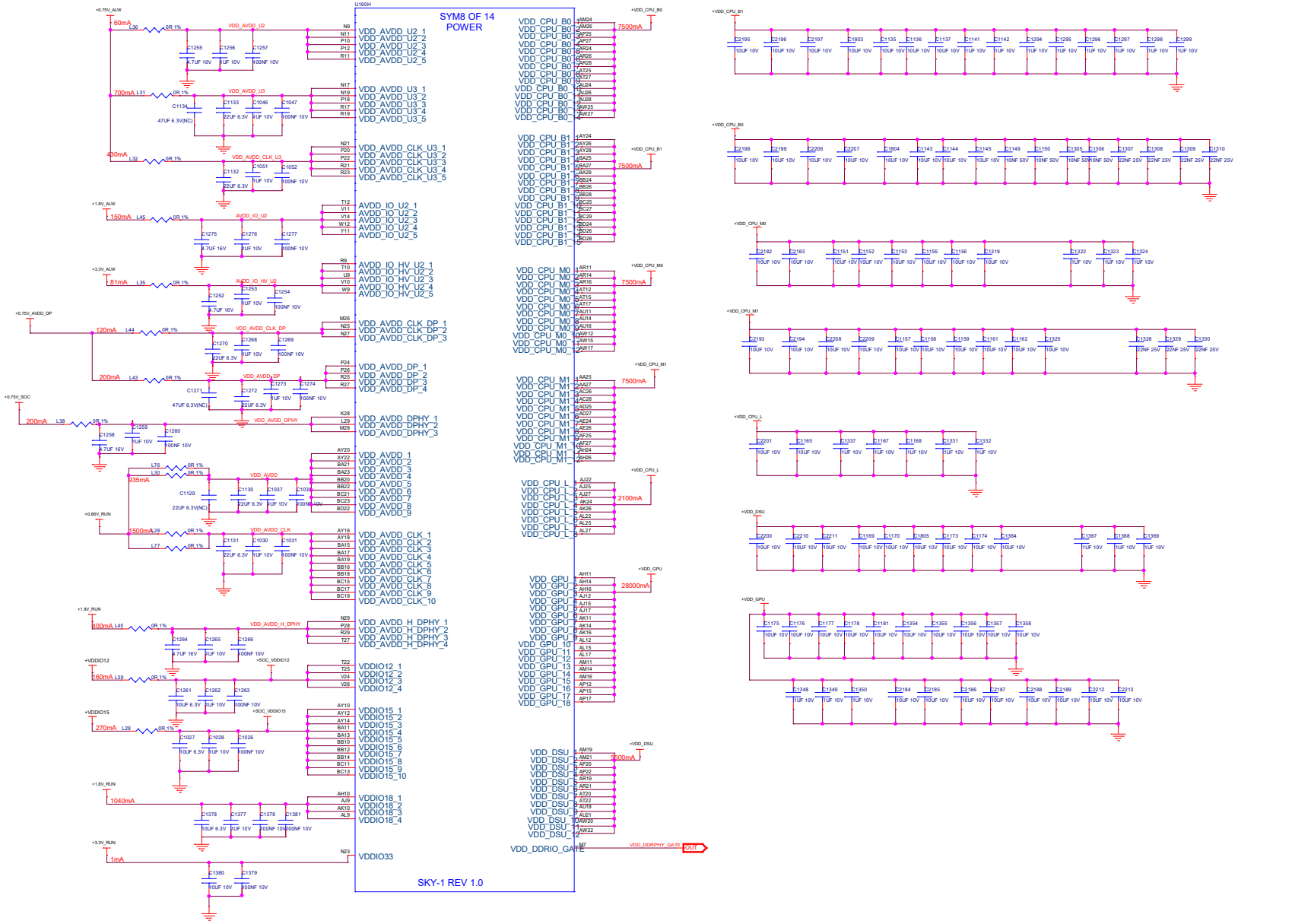

radxa

Size	Title:	REV
Custom	Page Name: 10 SKY1 POWER1	V1.11
Date: Thursday, November 20, 2025	Sheet 10 of 46	

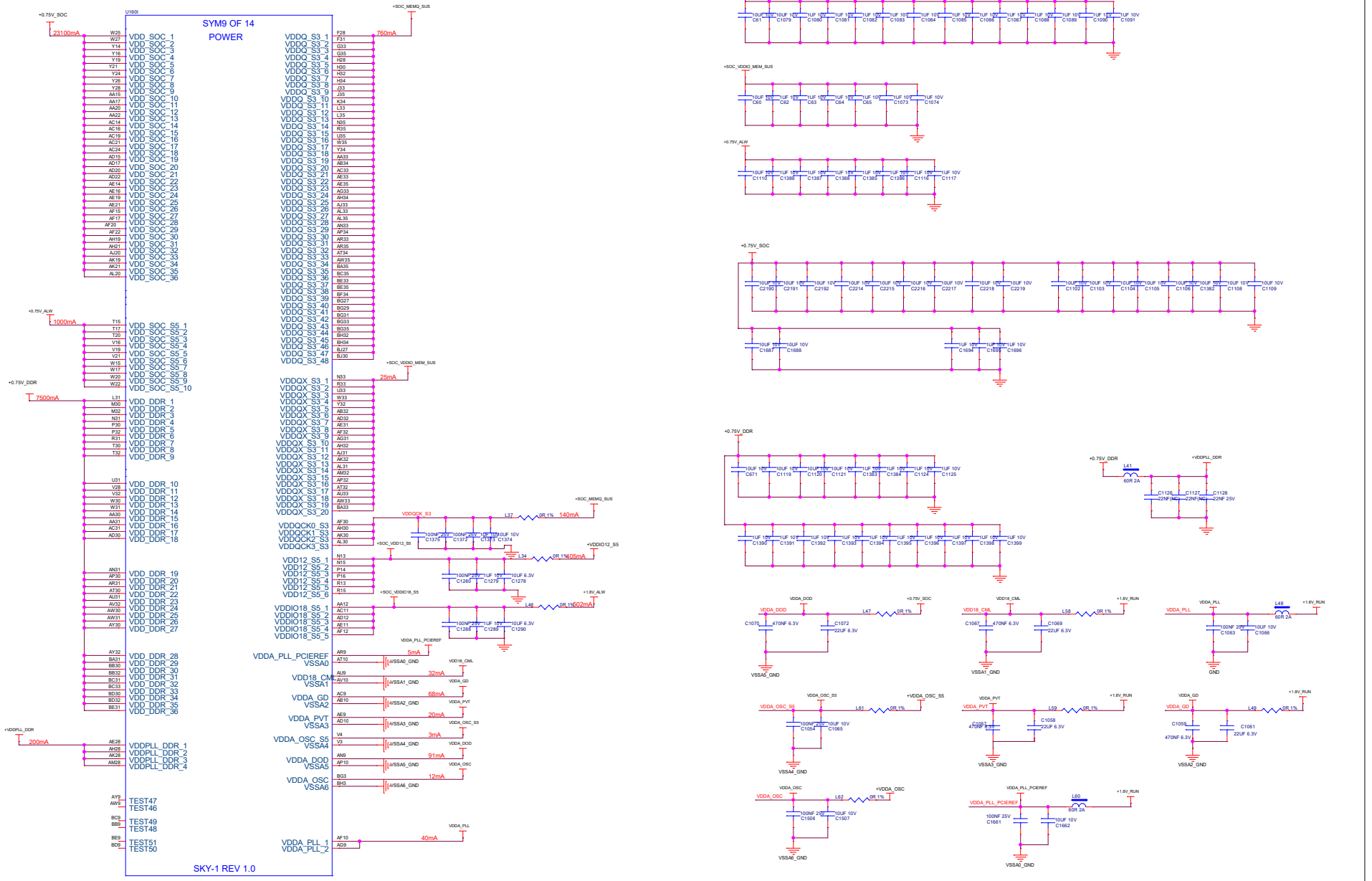

radxa

Size	Title: RS602	REV
Custom	Page Name: 11 SKY1 POWER2	V1.11
Date: Thursday, November 20, 2025	Sheet 11 of 46	

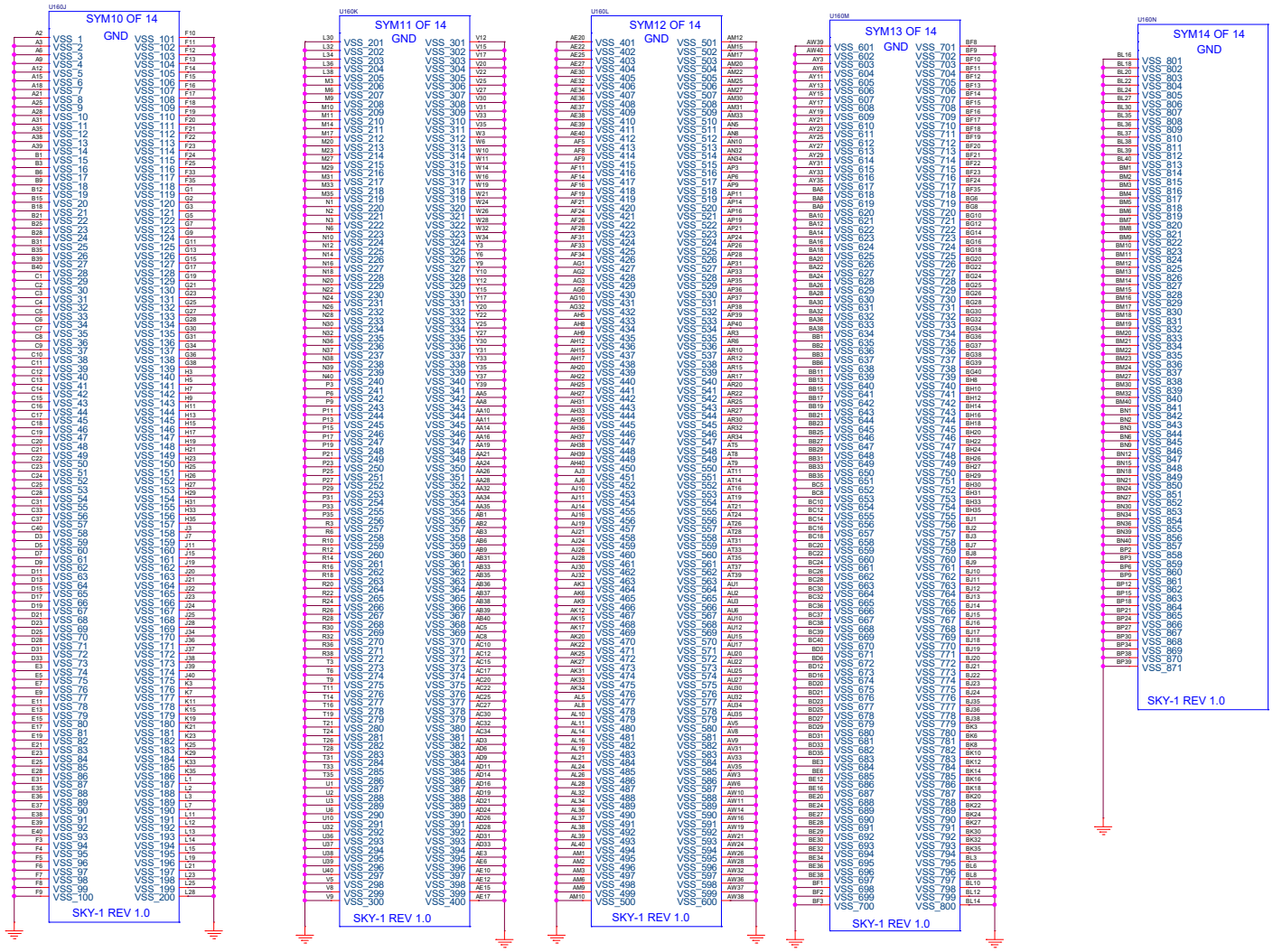

Size	Title:	RS602	REV
A2	Page Name:	12 SKY1 GND	V1.11

Date: Thursday, November 20, 2025 Sheet 12 of 46

UART DEBUG

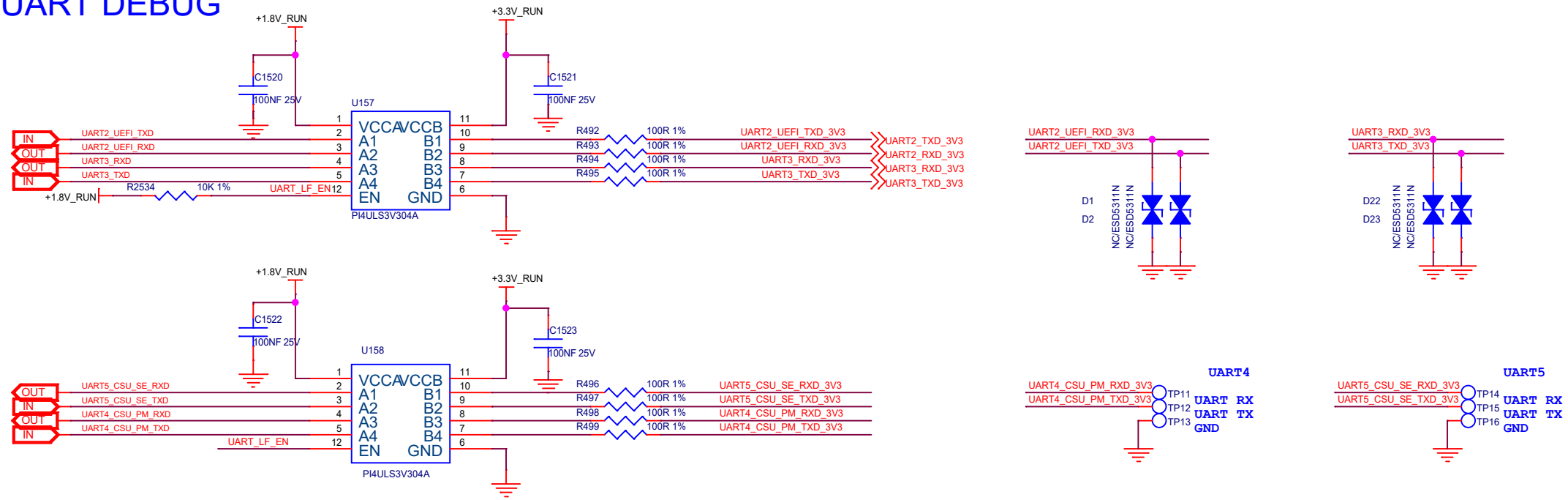

Size	Title: RS602	REV
A4	Page Name: 13 STRAP/UART DEBUG	V1.11
Date: Thursday, November 20, 2025	Sheet 13 of 46	

315 Ball LPDDR5

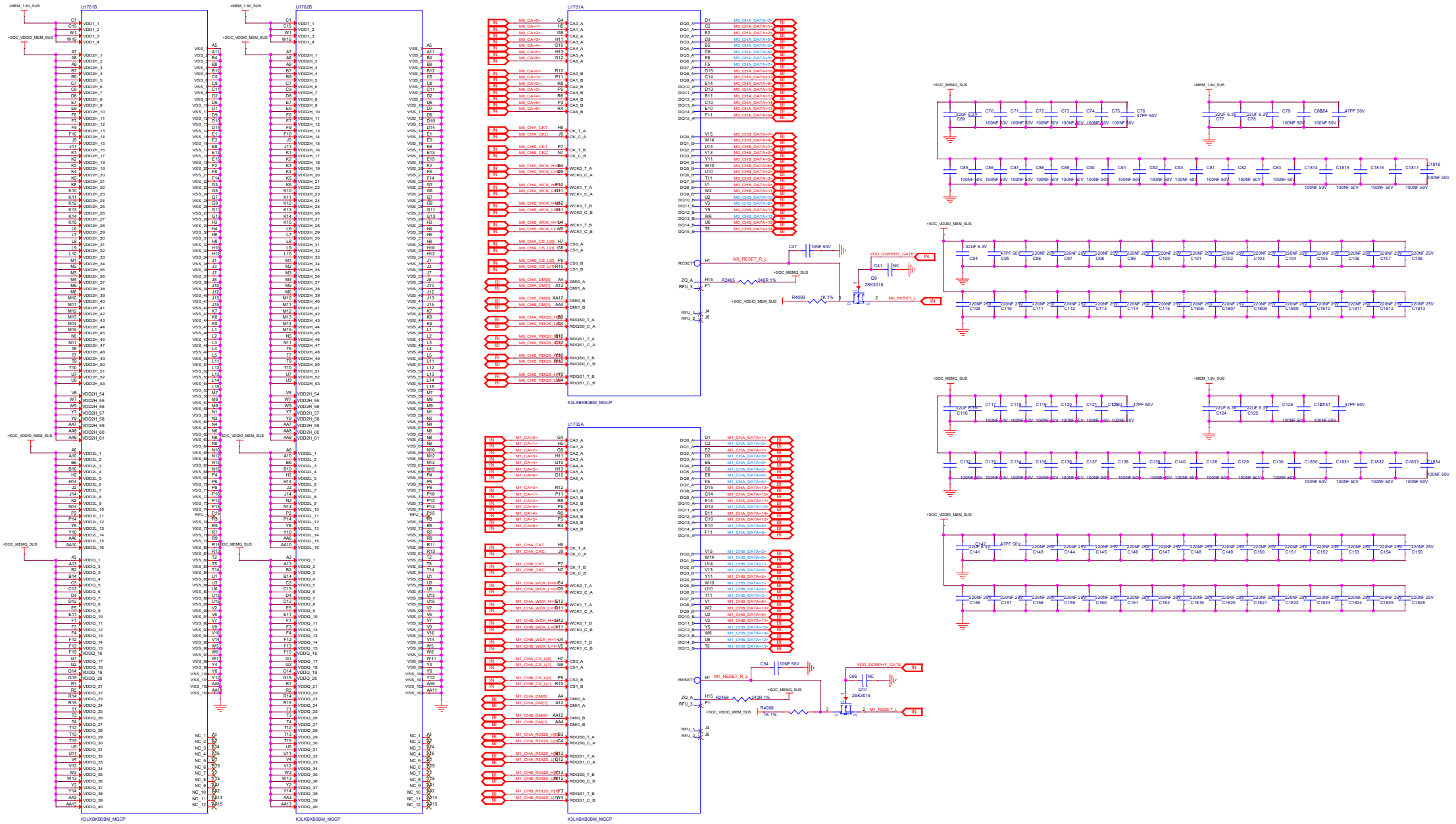

315 Ball LPDDR5

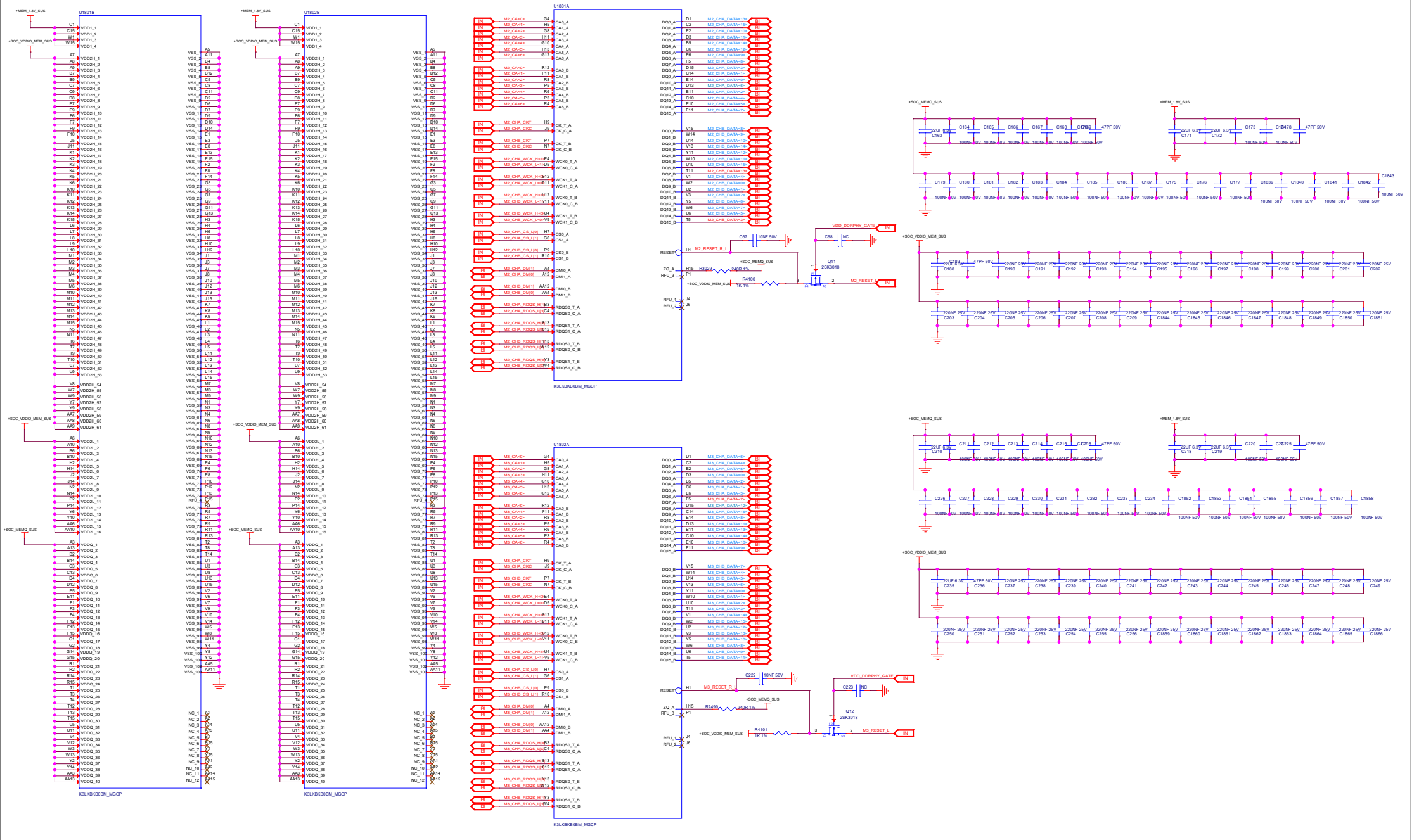

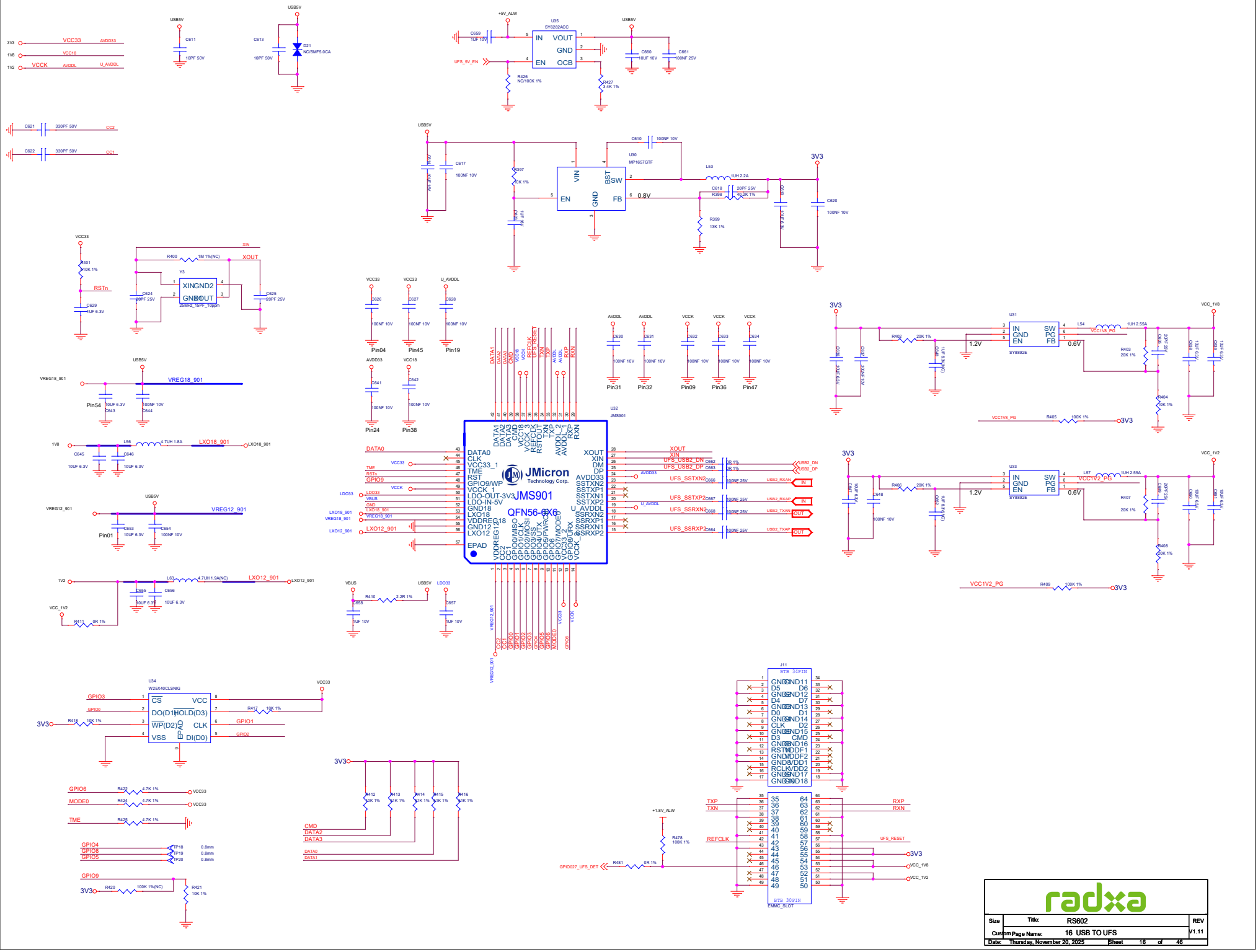
JMicron Technology Corp.
JMS901
QFN56-6X6
U32
JMS901
U35
SY6282ACC
U30
MP1657GTF
U31
SY8892E
U33
SY8892E
U34
W25X40CLSNG
J11
BTB 34PIN
BTB 30PIN
EMMC_SLOT
Y3
25MHz_15PF_10ppm
radxa
Size
Title: RS602
REV
V1.11
Custom
Page Name: 16 USB TO UFS
Date: Thursday, November 20, 2025
Sheet 16 of 46

Display Port

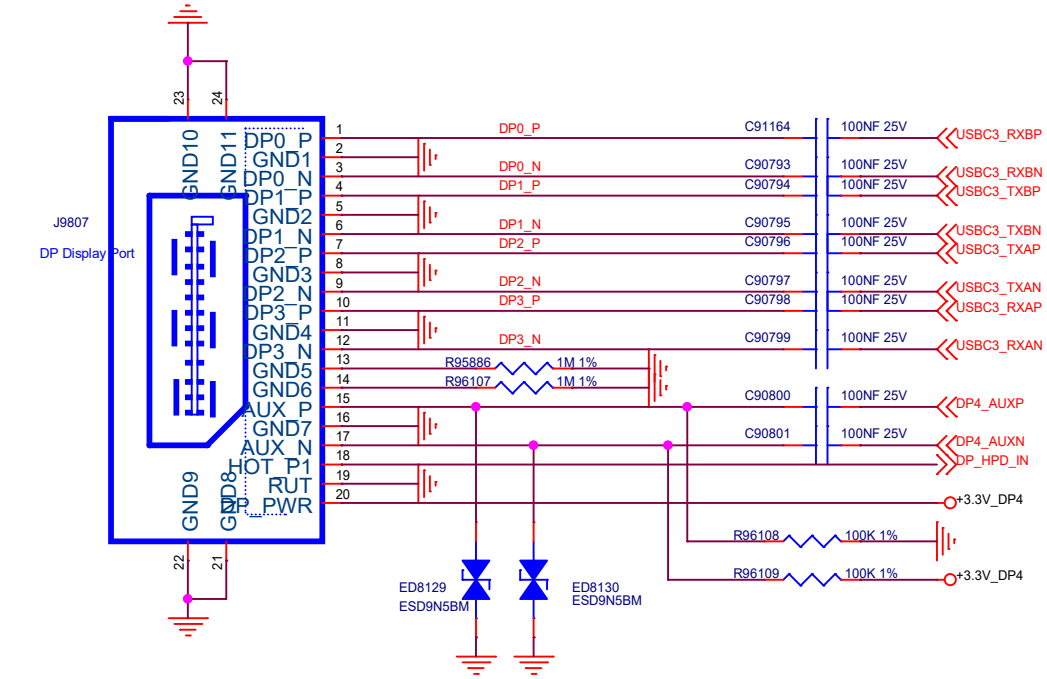

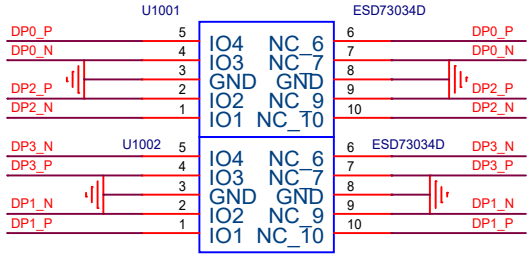

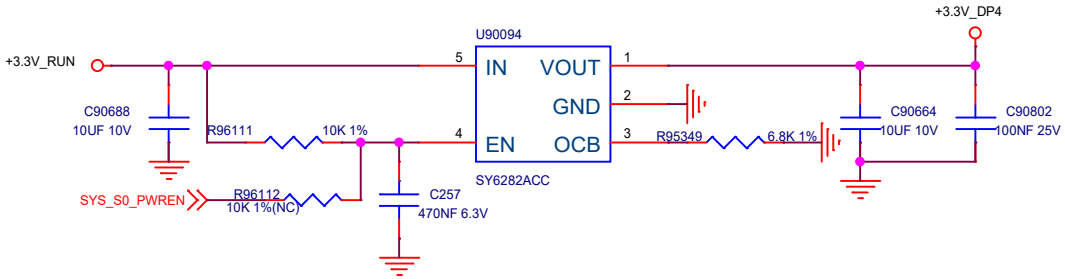

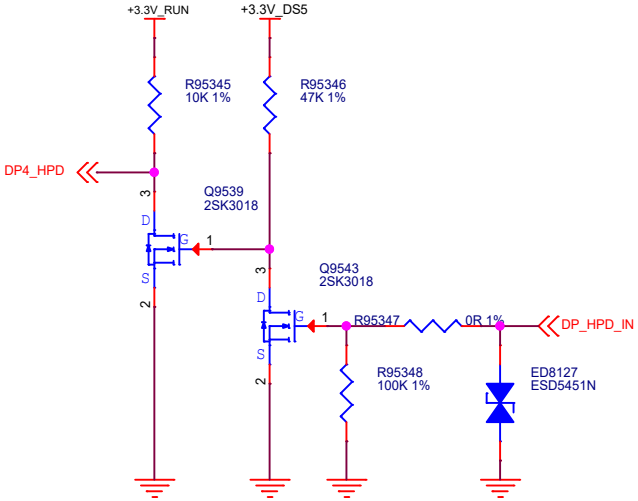

Size	Title: RS602		REV
A4	Page Name: 17 DP4		V1.11
Date: Thursday, November 20, 2025		Sheet 17 of 46	

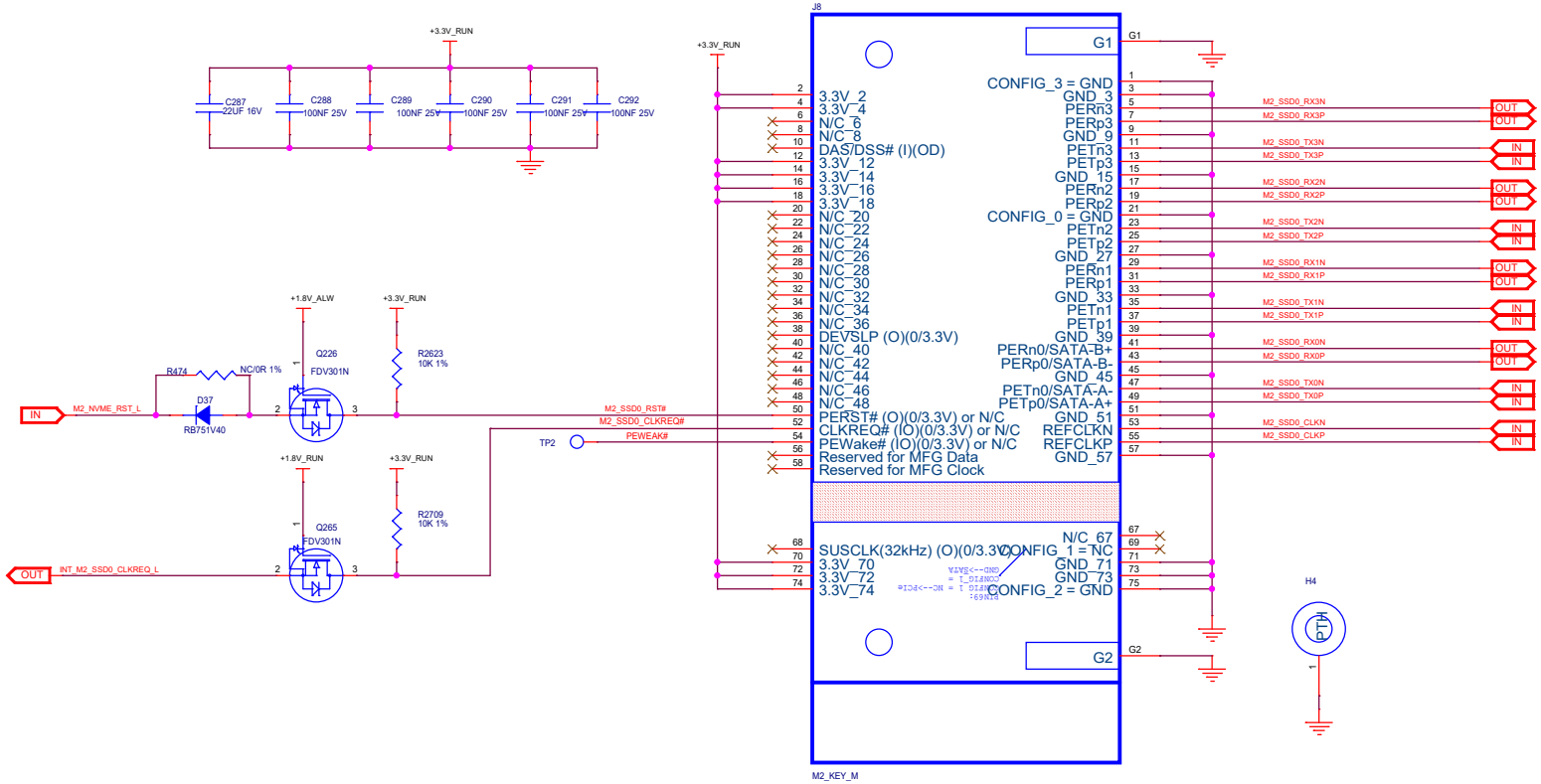

Size	Title:	REV
A3	Page Name: 18 M.2 SSD	V1.11
Date: Thursday, November 20, 2025	Sheet 18 of 46	

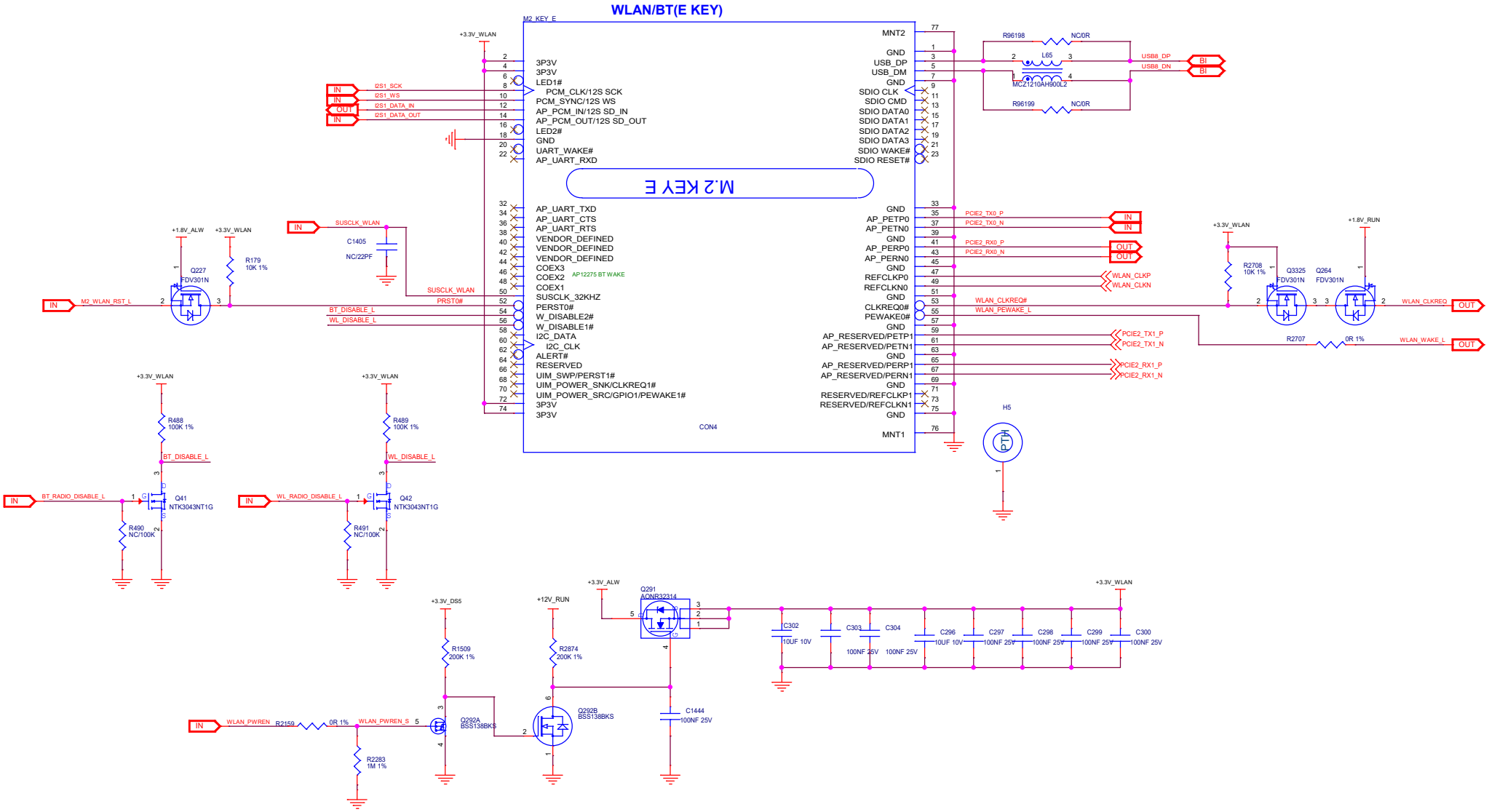

radxa

Size	Title:	RS602	REV
A3	Page Name:	19 M.2 WLAN/BT	V1.11
Date: Thursday, November 20, 2025	Sheet 19 of 46		

40 Pin Connctor

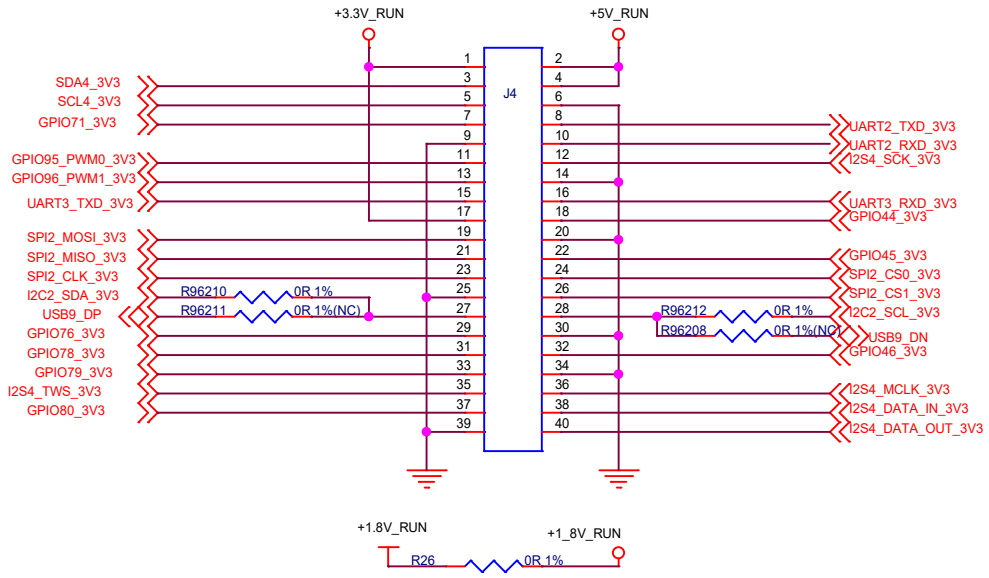

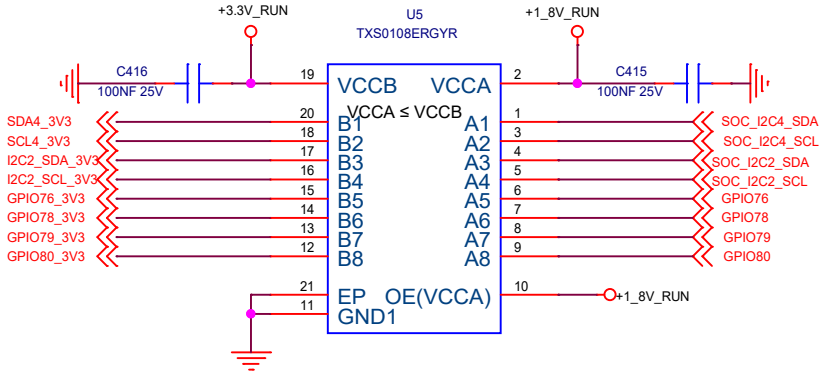

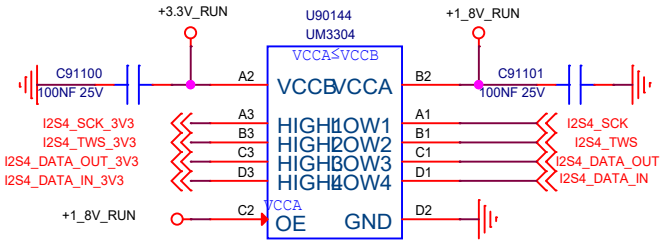

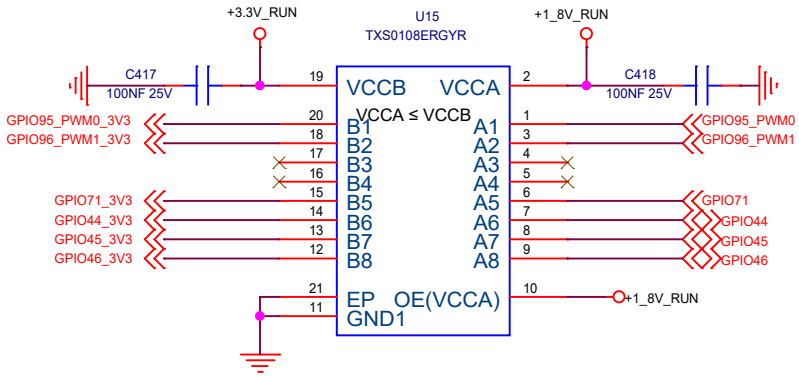

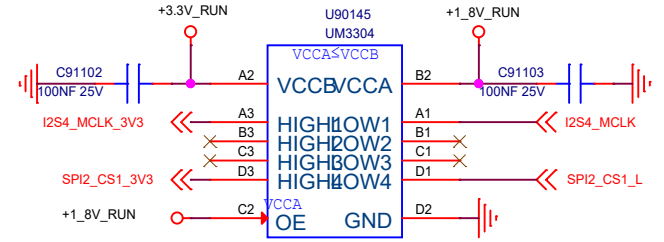

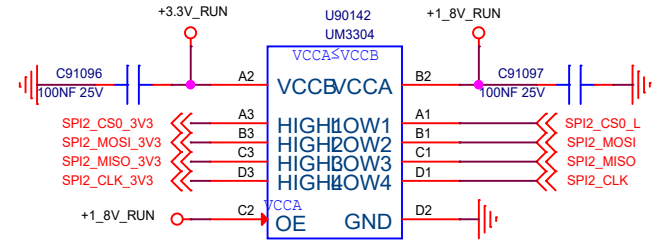

radxa

Size	Title: RS602	REV
A4	Page Name: 20 40PIN_CONN	V1.11
Date: Thursday, November 20, 2025	Sheet 20 of 46	

DP to HDMI

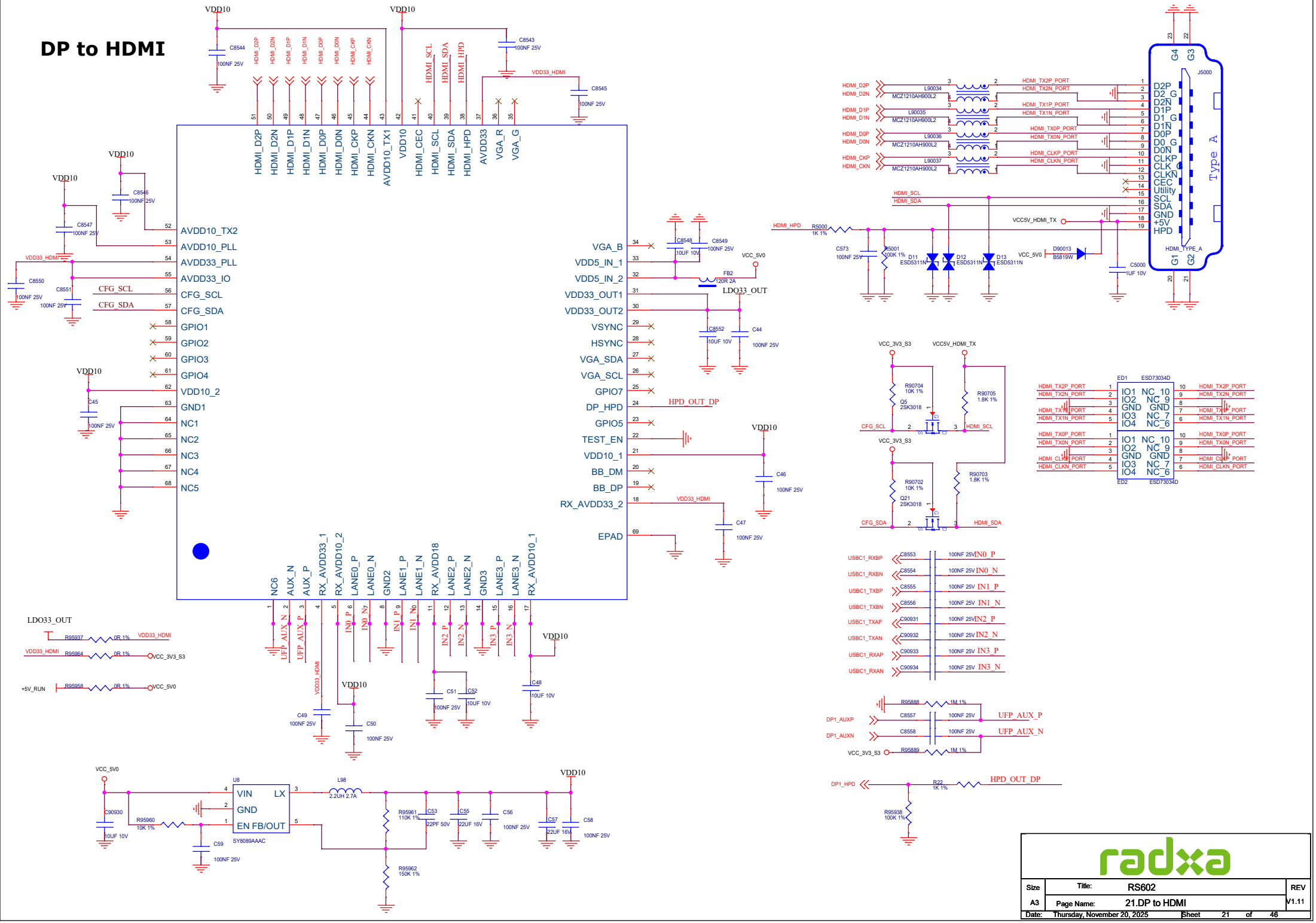

Size	Title:	RS602	REV
A3	Page Name:	21.DP to HDMI	V1.11
Date: Thursday, November 20, 2025	Sheet 21 of 46		

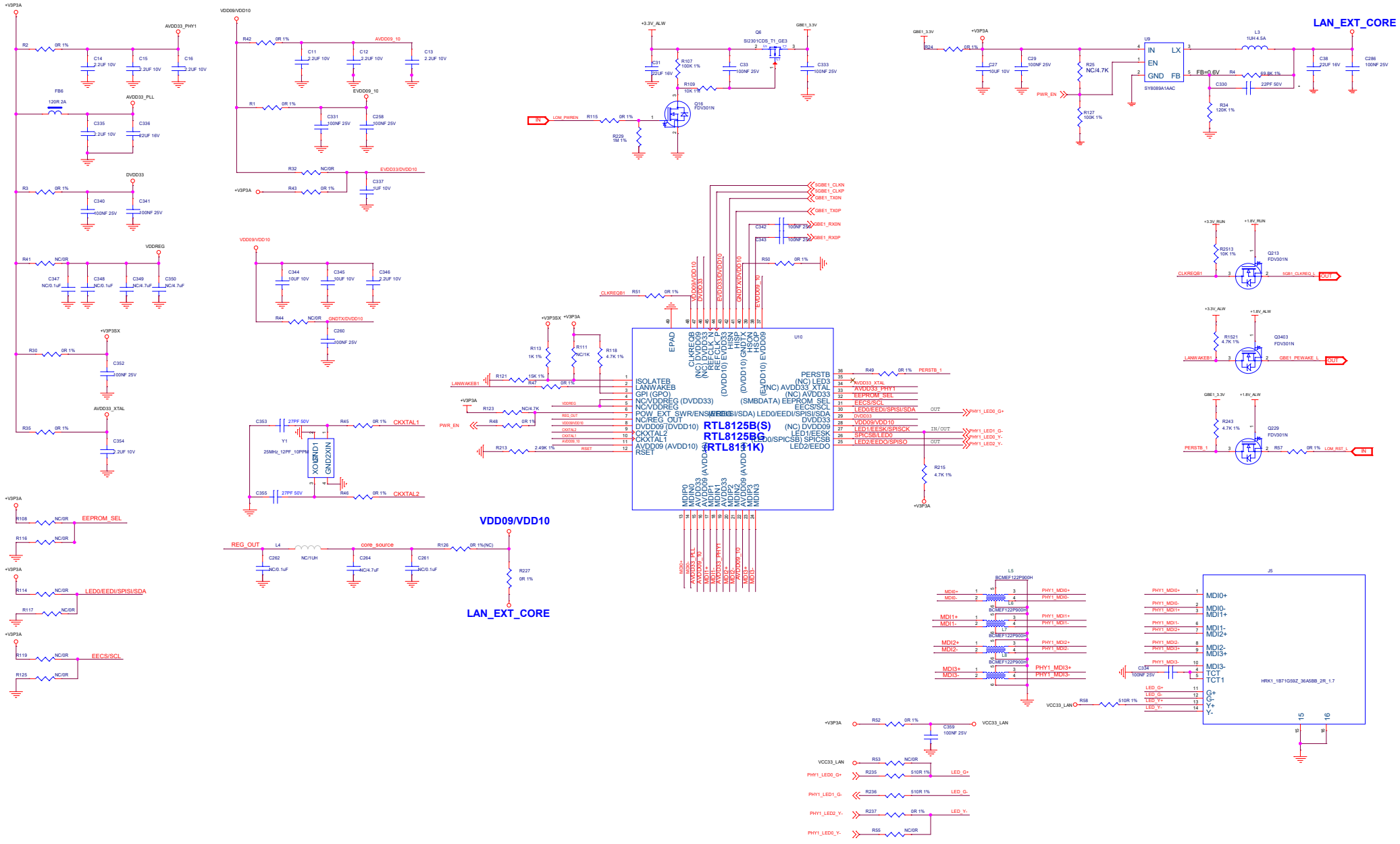

Size	Title:	RS602	REV
A2	Page Name:	22 PCIE 5G_Ethernet_1	V1.11
Date: Thursday, November 20, 2025	Sheet 22 of 46		

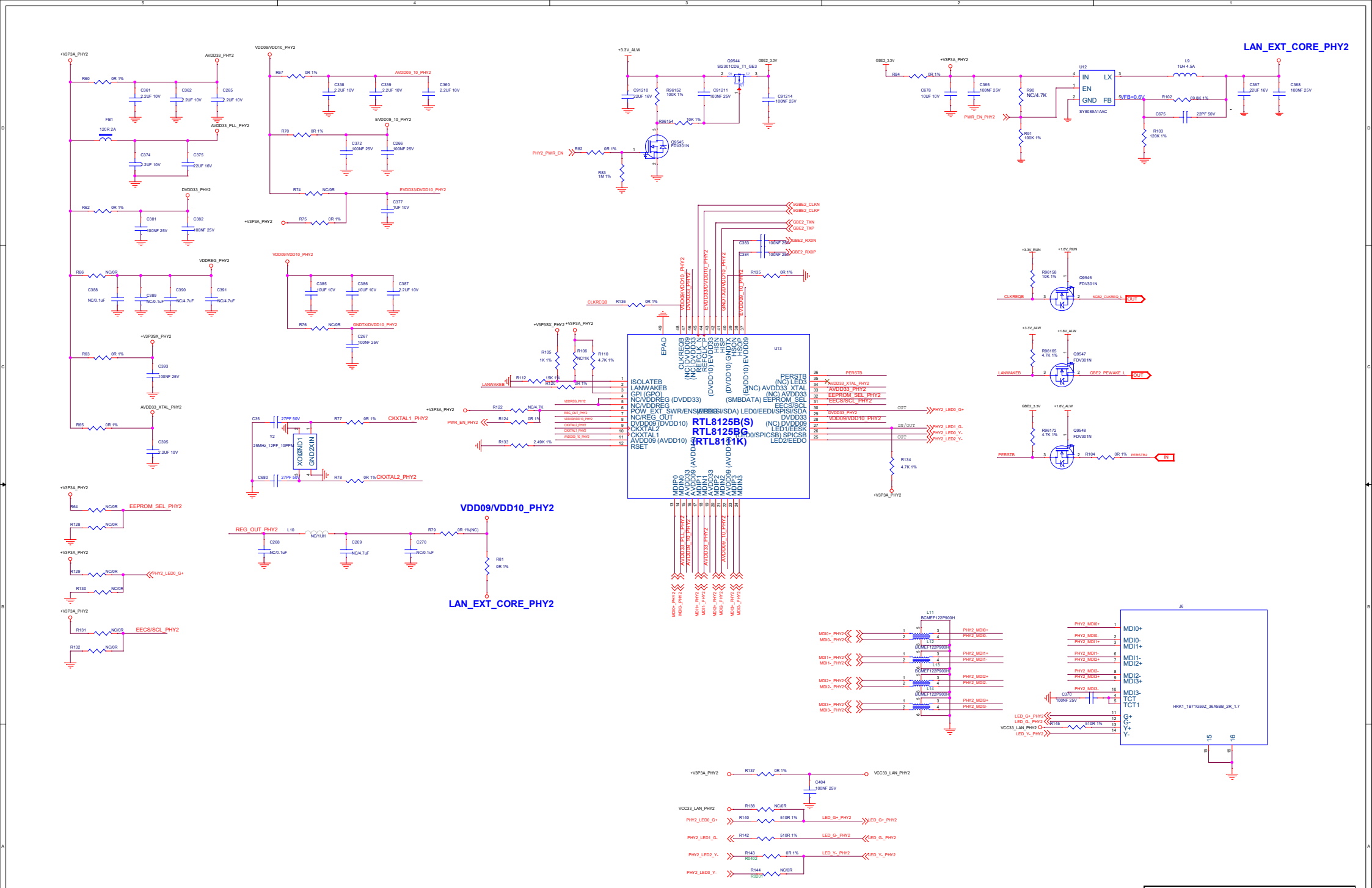

radxa

Size	Title: RS602	REV
A2	Page Name: 23 PCIE 5G_Ethernet_2	V1.11
Date: Thursday, November 20, 2025	Sheet 23 of 46	

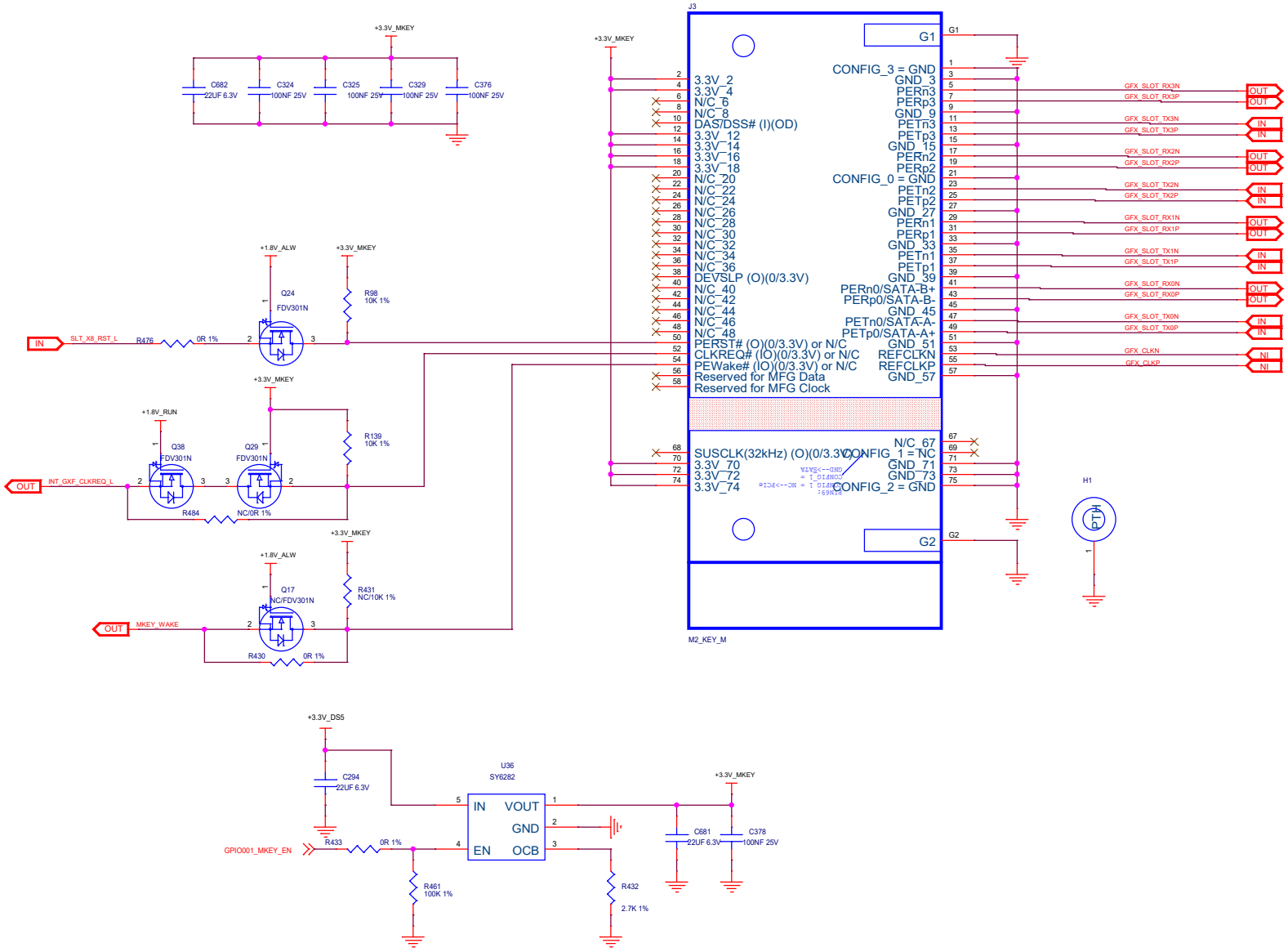

radxa

Size	Title:	RS602	REV
A3	Page Name:	24 M KEY	V1.11
Date: Thursday, November 20, 2025	Sheet 24 of 46		

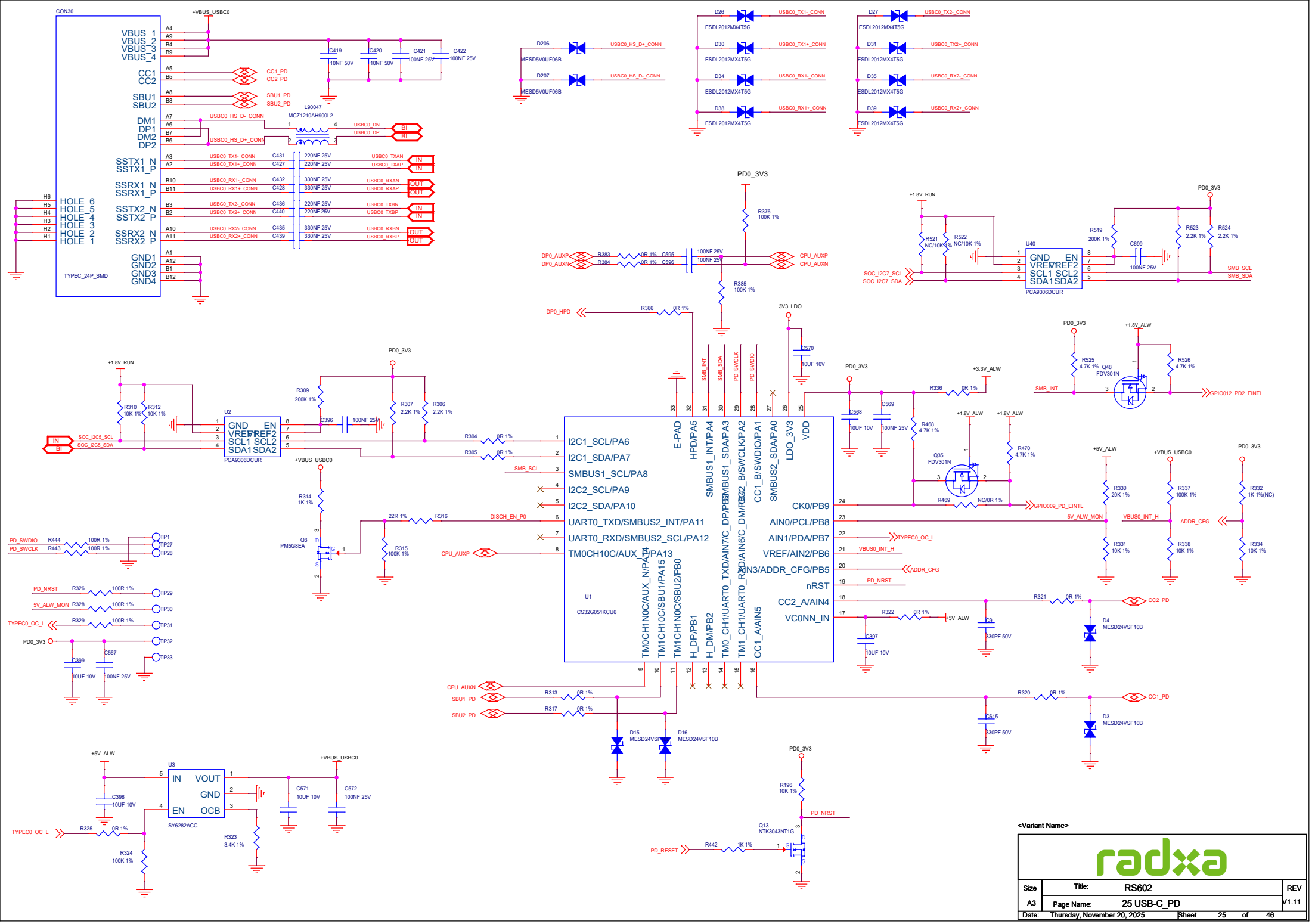
CON30
TYPEC_24P_SMD
VBUS_1
VBUS_2
VBUS_3
VBUS_4
CC1
CC2
SBU1
SBU2
DM1
DP1
DM2
DP2
SSTX1_N
SSTX1_P
SSRX1_N
SSRX1_P
SSTX2_N
SSTX2_P
SSRX2_N
SSRX2_P
GND1
GND2
GND3
GND4
HOLE_6
HOLE_5
HOLE_4
HOLE_3
HOLE_2
HOLE_1
+VBUS_USBC0
C419 10NF 50V
C420 10NF 50V
C421 100NF 25V
C422 100NF 25V
CC1_PD
CC2_PD
SBU1_PD
SBU2_PD
L90047
MCZ1210AH900L2
USBC0_HS_D-_CONN
USBC0_HS_D+_CONN
USBC0_DN
USBC0_DP
USBC0_TX1-_CONN
USBC0_TX1+_CONN
USBC0_TXAN
USBC0_TXAP
USBC0_RX1-_CONN
USBC0_RX1+_CONN
USBC0_RXAN
USBC0_RXAP
USBC0_TX2-_CONN
USBC0_TX2+_CONN
USBC0_TXBN
USBC0_TXBP
USBC0_RX2-_CONN
USBC0_RX2+_CONN
USBC0_RXBN
USBC0_RXBP
D206 MESD5V0UF06B
D207 MESD5V0UF06B
USBC0_HS_D+_CONN
USBC0_HS_D-_CONN
D26 ESDL2012MX4T5G
D30 ESDL2012MX4T5G
D34 ESDL2012MX4T5G
D38 ESDL2012MX4T5G
D27 ESDL2012MX4T5G
D31 ESDL2012MX4T5G
D35 ESDL2012MX4T5G
D39 ESDL2012MX4T5G
PD0_3V3
R376 100K 1%
R385 100K 1%
DP0_AUXP
DP0_AUXN
R383 0R 1%
R384 0R 1%
C595 100NF 25V
C596 100NF 25V
CPU_AUXP
CPU_AUXN
DP0_HPD
R386 0R 1%
+1.8V_RUN
R521 NC/10K 1%
R522 NC/10K 1%
U40
PCA9306DCUR
SOC_I2C7_SCL
SOC_I2C7_SDA
R519 200K 1%
C699 100NF 25V
R523 2.2K 1%
R524 2.2K 1%
SMB_SCL
SMB_SDA
3V3_LDO
C570 10UF 10V
R525 4.7K 1%
Q48 FDV301N
R526 4.7K 1%
+1.8V_ALW
SMB_INT
GPIO012_PD2_EINTL
R310 10K 1%
R312 10K 1%
U2
PCA9306DCUR
SOC_I2C5_SCL
SOC_I2C5_SDA
R309 200K 1%
C396 100NF 25V
R307 2.2K 1%
R306 2.2K 1%
R304 0R 1%
R305 0R 1%
SMB_SCL
DISCH_EN_P0
CPU_AUXP
R314 1K 1%
Q3 PM5G8EA
22R 1%
R316
R315 100K 1%
PD_SWDIO
PD_SWCLK
R444 100R 1%
R443 100R 1%
TP1
TP27
TP28
PD_NRST
R326 100R 1%
5V_ALW_MON
R328 100R 1%
TYPEC0_OC_L
R329 100R 1%
TP29
TP30
TP31
TP32
TP33
C399 10UF 10V
C567 100NF 25V
U1
CS32G051KCU6
E-PAD
HPD/PA5
SMBUS1_INT/PA4
SMBUS1_SDA/PA3
CC2_B/SWCLK/PA2
CC1_B/SWDIO/PA1
SMBUS2_SDA/PA0
LDO_3V3
VDD
I2C1_SCL/PA6
I2C1_SDA/PA7
SMBUS1_SCL/PA8
I2C2_SCL/PA9
I2C2_SDA/PA10
UART0_TXD/SMBUS2_INT/PA11
UART0_RXD/SMBUS2_SCL/PA12
TM0CH10C/AUX_P/PA13
TM0CH1N0C/AUX_N/PA14
TM1CH10C/SBU1/PA15
TM1CH1N0C/SBU2/PB0
H_DP/PB1
H_DM/PB2
TM0_CH1/UART0_TXD/AIN7/C_DP/PB3
TM1_CH1/UART0_RXD/AIN6/C_DM/PB4
CC1_A/AIN5
CK0/PB9
AIN0/PCL/PB8
AIN1/PDA/PB7
VREF/AIN2/PB6
AIN3/ADDR_CFG/PB5
nRST
CC2_A/AIN4
VC0NN_IN
C568 10UF 10V
C569 100NF 25V
R336 0R 1%
+3.3V_ALW
R468 4.7K 1%
Q35 FDV301N
R470 4.7K 1%
R469 NC/0R 1%
GPIO009_PD_EINTL
5V_ALW_MON
TYPEC0_OC_L
VBUS0_INT_H
ADDR_CFG
PD_NRST
R321 0R 1%
CC2_PD
R322 0R 1%
+5V_ALW
C397 10UF 10V
C9 330PF 50V
D4 MESD24VSF10B
R330 20K 1%
R331 10K 1%
R337 100K 1%
R338 10K 1%
R332 1K 1%(NC)
R334 10K 1%
CPU_AUXN
SBU1_PD
SBU2_PD
R313 0R 1%
R317 0R 1%
D15 MESD24VSF10B
D16 MESD24VSF10B
R320 0R 1%
CC1_PD
C615 330PF 50V
D3 MESD24VSF10B
+5V_ALW
U3
SY6282ACC
IN
VOUT
GND
EN
OCB
C398 10UF 10V
C571 10UF 10V
C572 100NF 25V
TYPEC0_OC_L
R325 0R 1%
R324 100K 1%
R323 3.4K 1%
R196 10K 1%
Q13 NTK3043NT1G
PD_RESET
R442 1K 1%
<Variant Name>
radxa
Size A3
Title: RS602
REV V1.11
Page Name: 25 USB-C_PD
Date: Thursday, November 20, 2025
Sheet 25 of 46

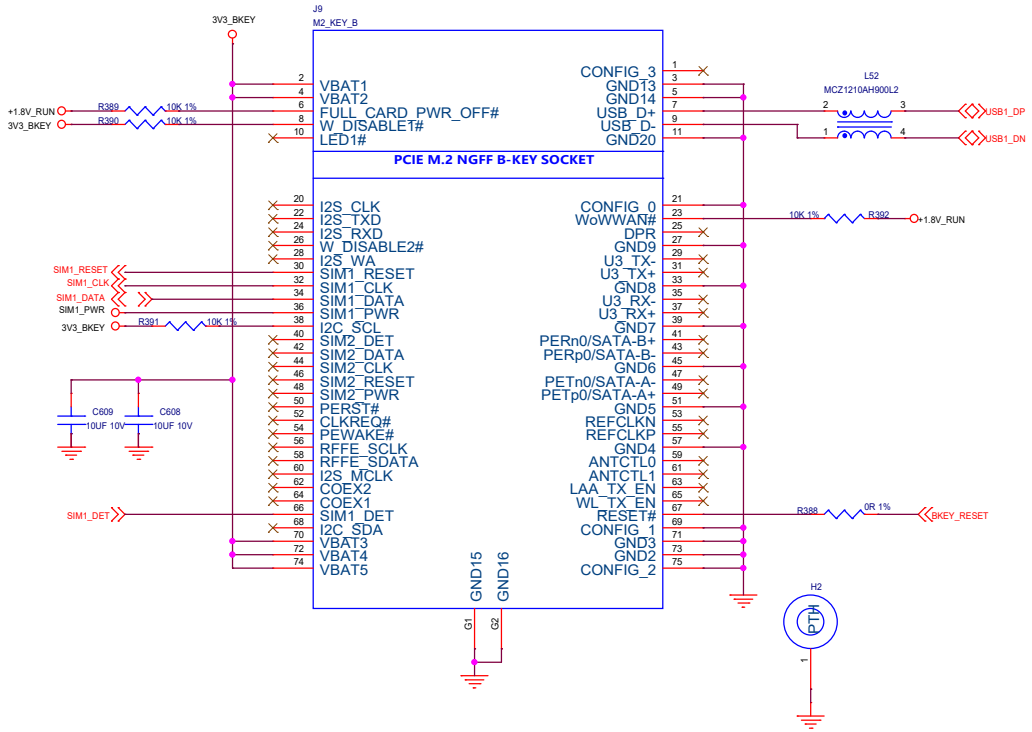

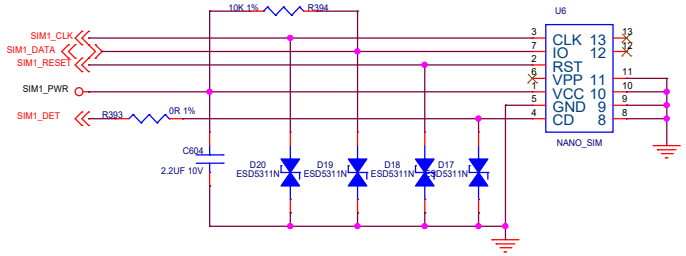

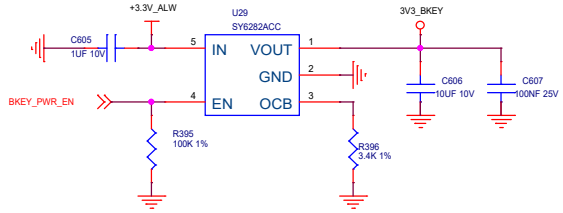

Size	Title:	RS602	REV
A3	Page Name:	26 B KEY	V1.11
Date: Thursday, November 20, 2025	Sheet 26 of 46		

USB3.0

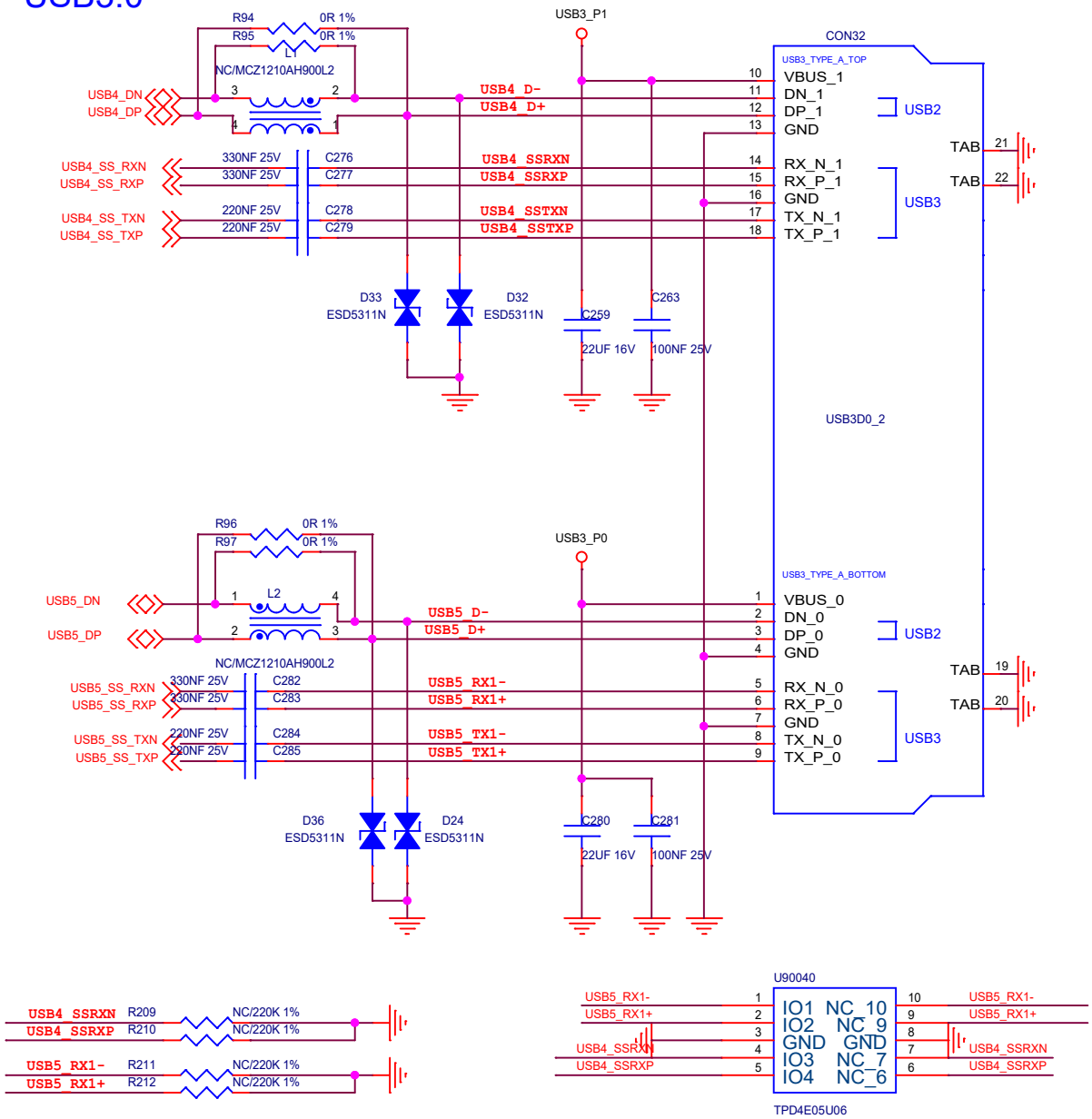

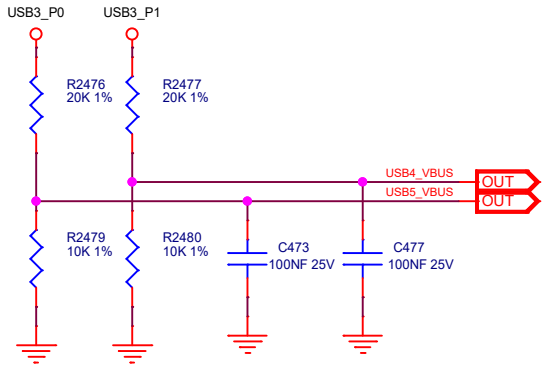

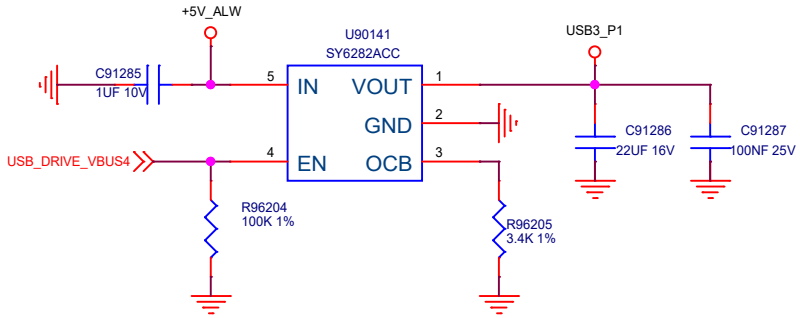

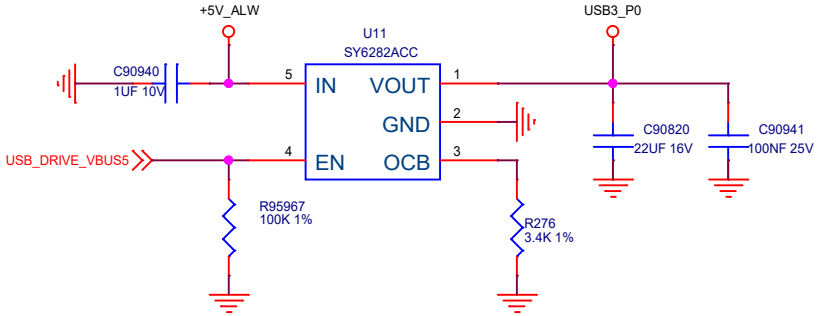

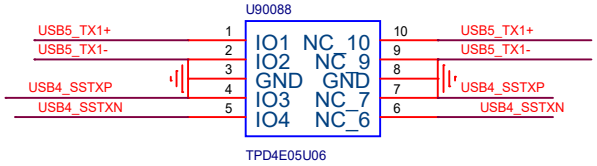

Size	Title: RS602	REV
A4	Page Name: 27 USB-3.0	V1.11
Date: Thursday, November 20, 2025	Sheet 27 of 46	

USB2.0

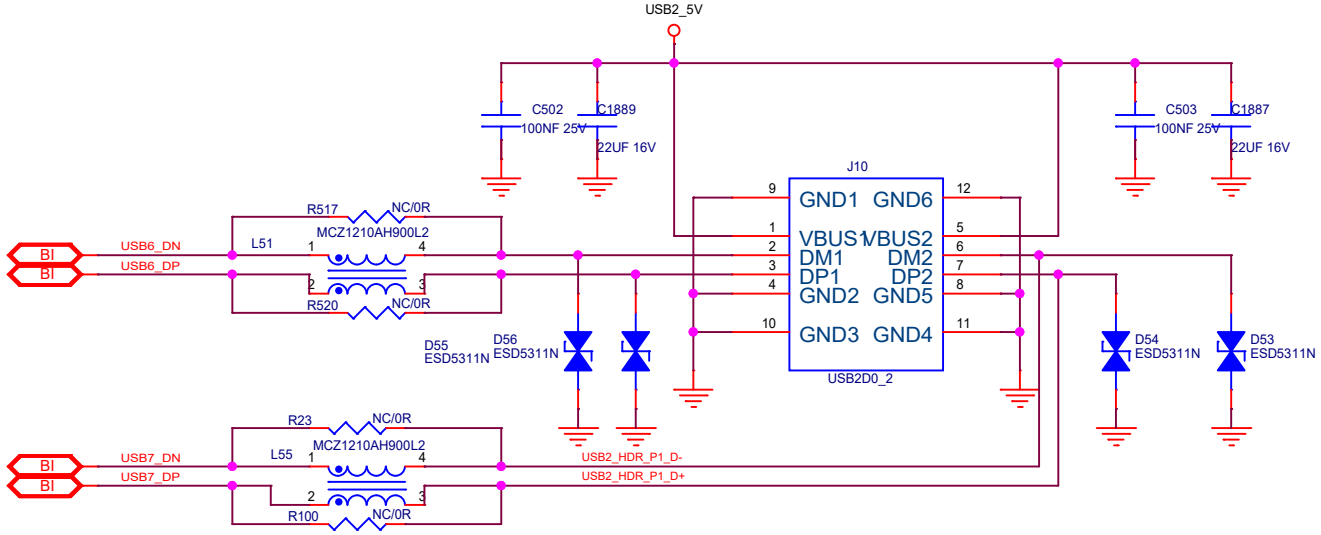

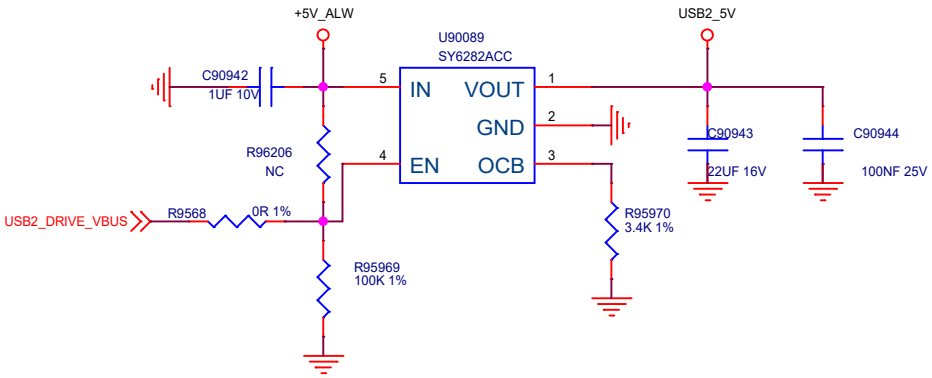

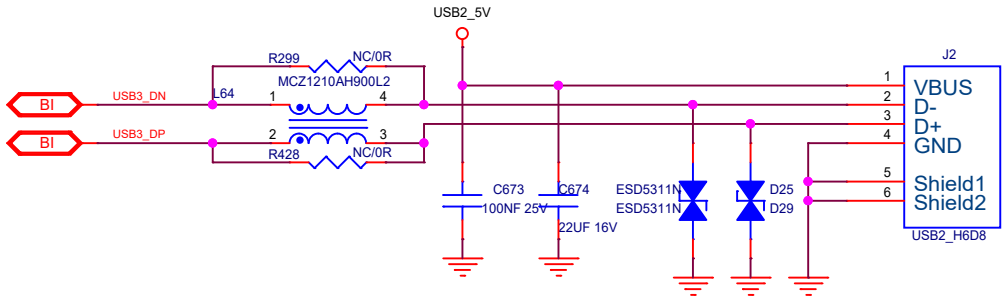

radxa

Size	Title:	RS602	REV
A4	Page Name:	28 USB2 HDR	V1.11
Date:	Thursday, November 20, 2025	Sheet 28 of 46	

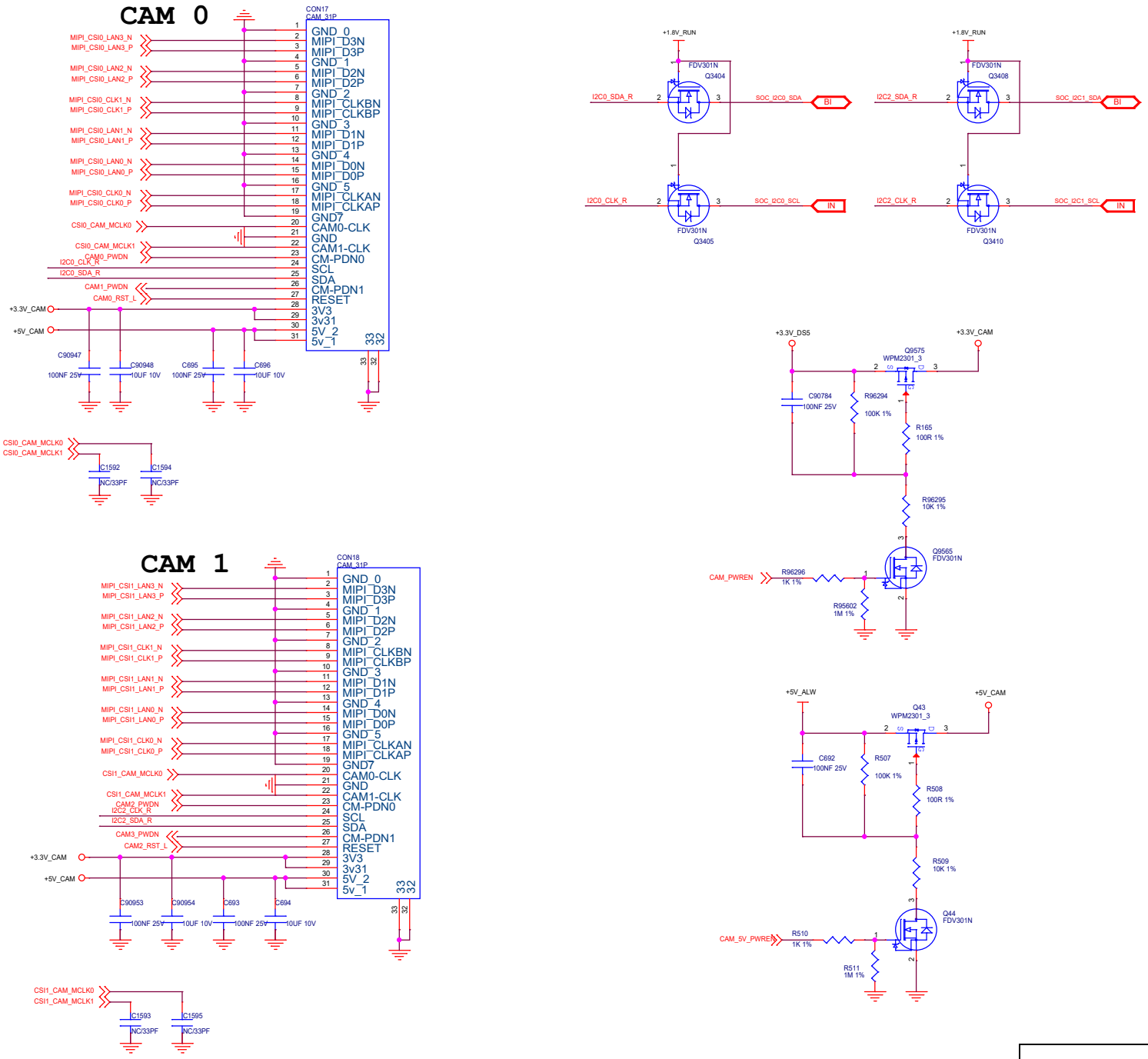

radxa

Size	Title:	RS602	REV
A3	Page Name:	29 CAMERA	V1.11
Date:	Thursday, November 20, 2025	Sheet 29 of 46	

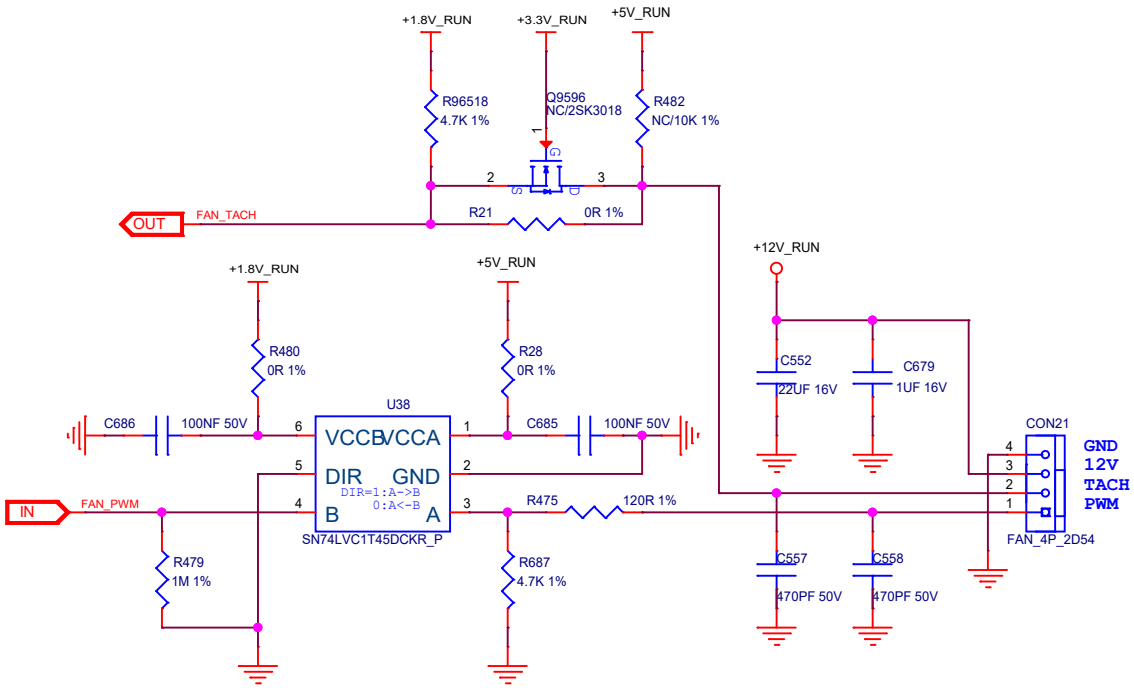

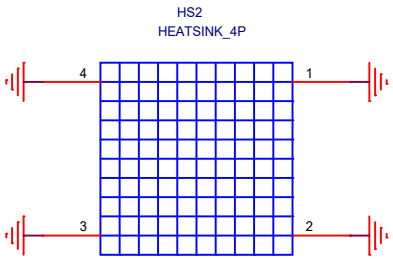

<Variant Name>

Size	Title:	RS602	REV
A4	Page Name:	30 FAN CON	V1.11
Date:	Thursday, November 20, 2025	Sheet 30 of 46	

SPI TPM 2.0(OPTION)

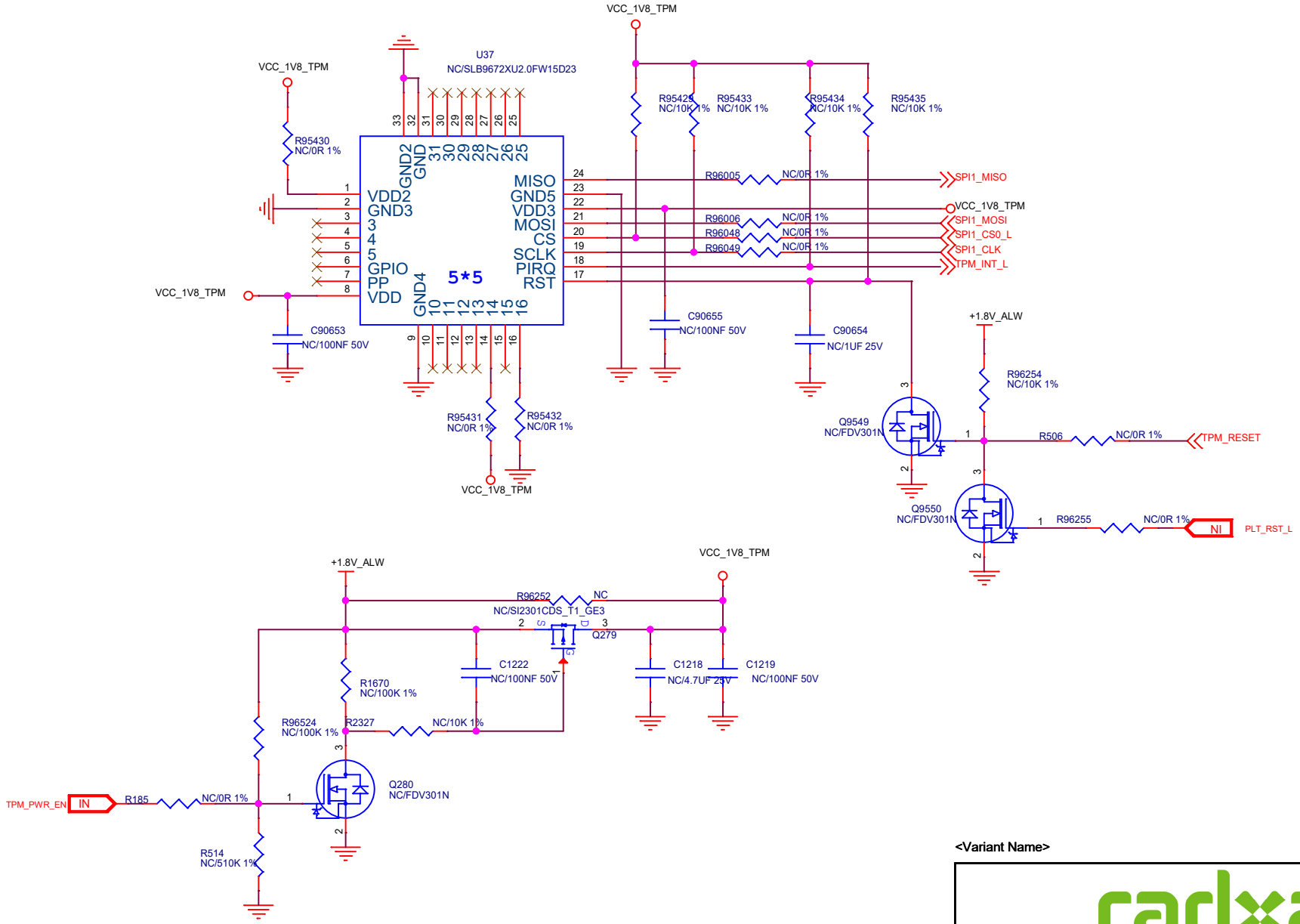

<Variant Name>

Size	Title:	RS602	REV
A4	Page Name:	31 TPM	V1.11
Date:	Thursday, November 20, 2025	Sheet 31 of 46	

SPI ROM

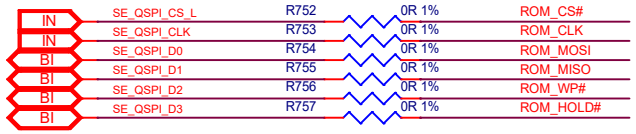

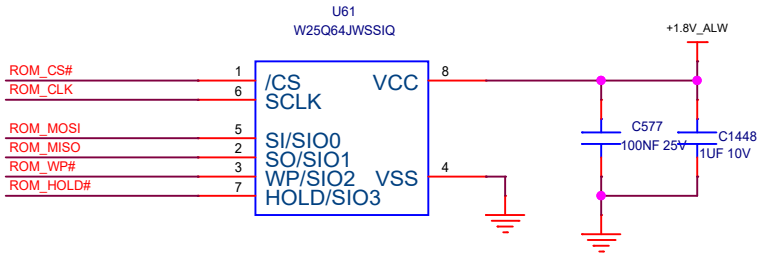

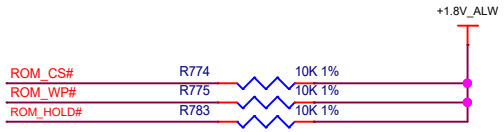

<Variant Name>

Size	Title:	RS602	REV
A4	Page Name:	32 SPI-ROM	V1.11
Date:	Thursday, November 20, 2025	Sheet 32 of 46	

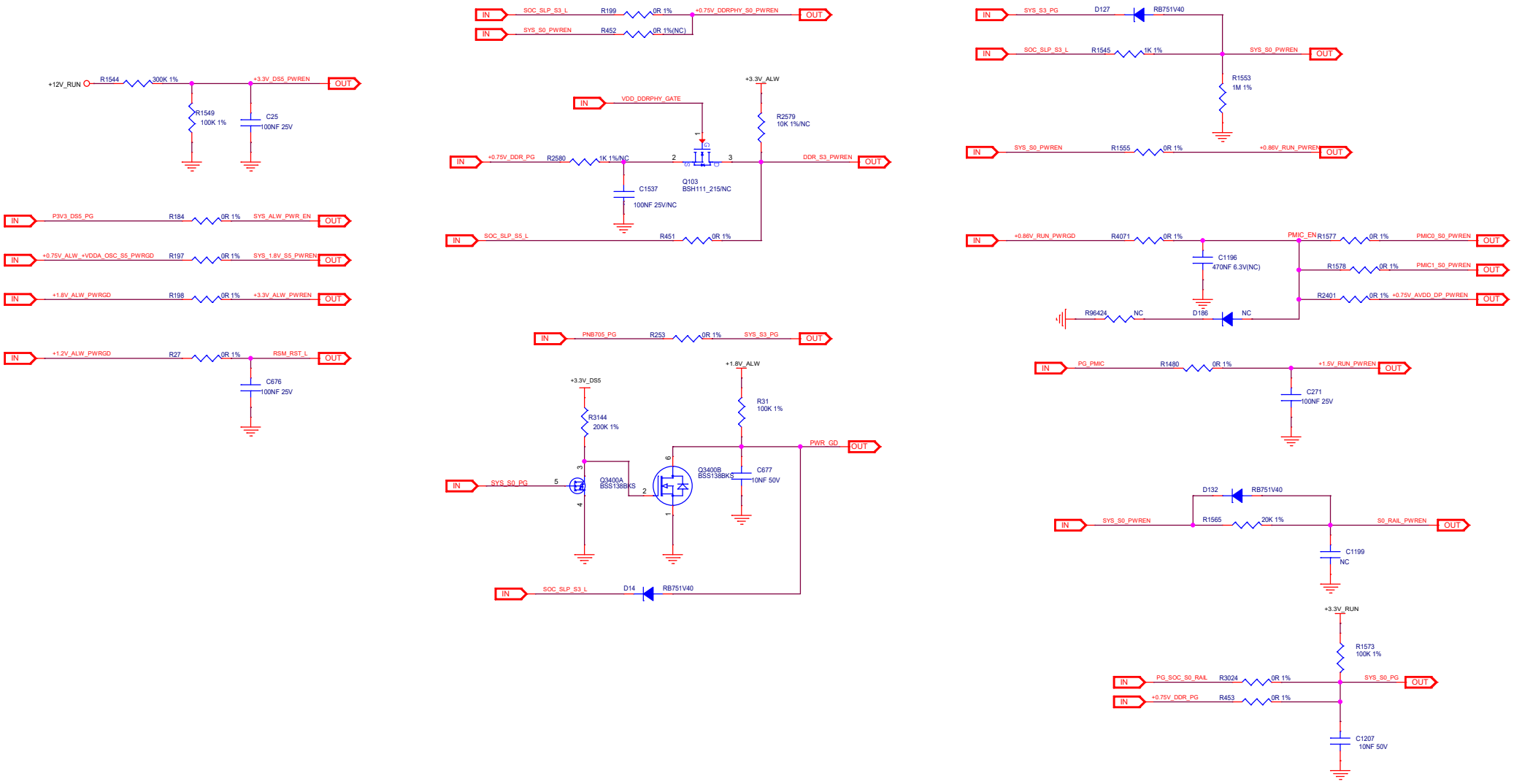

<Variant Name>

Size	Title: RS602	REV
A3	Page Name: 33 Power Sequence	V1.11
Date: Thursday, November 20, 2025	Sheet 33 of 46	

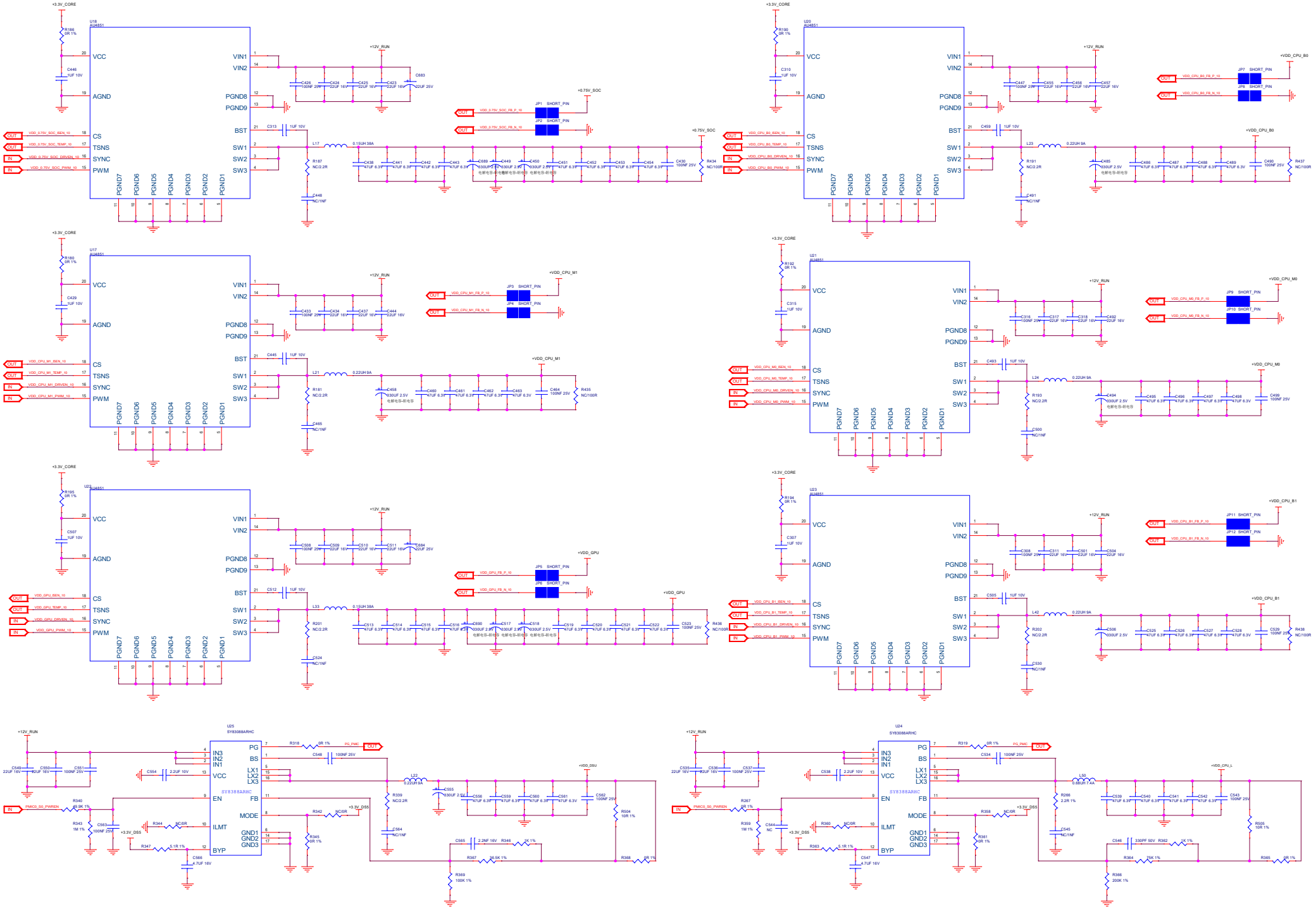

radxa

Size	Title: RS602	REV
Custom	Page Name: 34 VCORE_DRMOS	V1.11
Date: Thursday, November 20, 2025	Sheet 34 of 46	

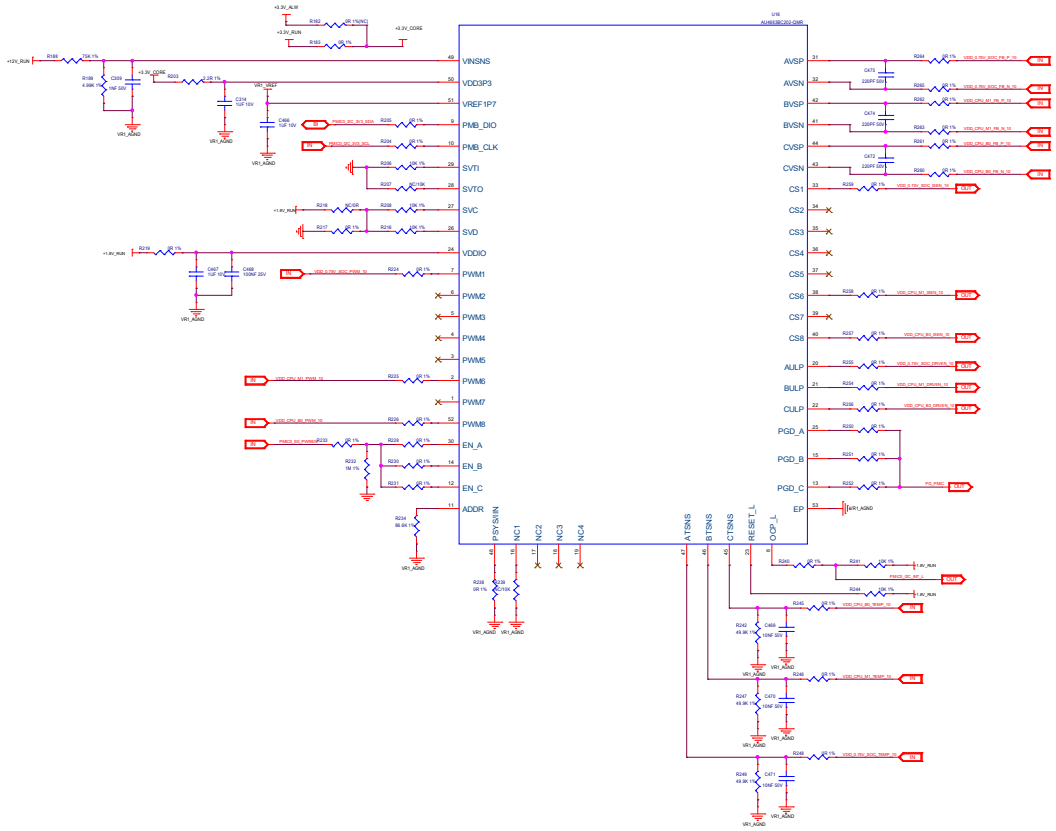

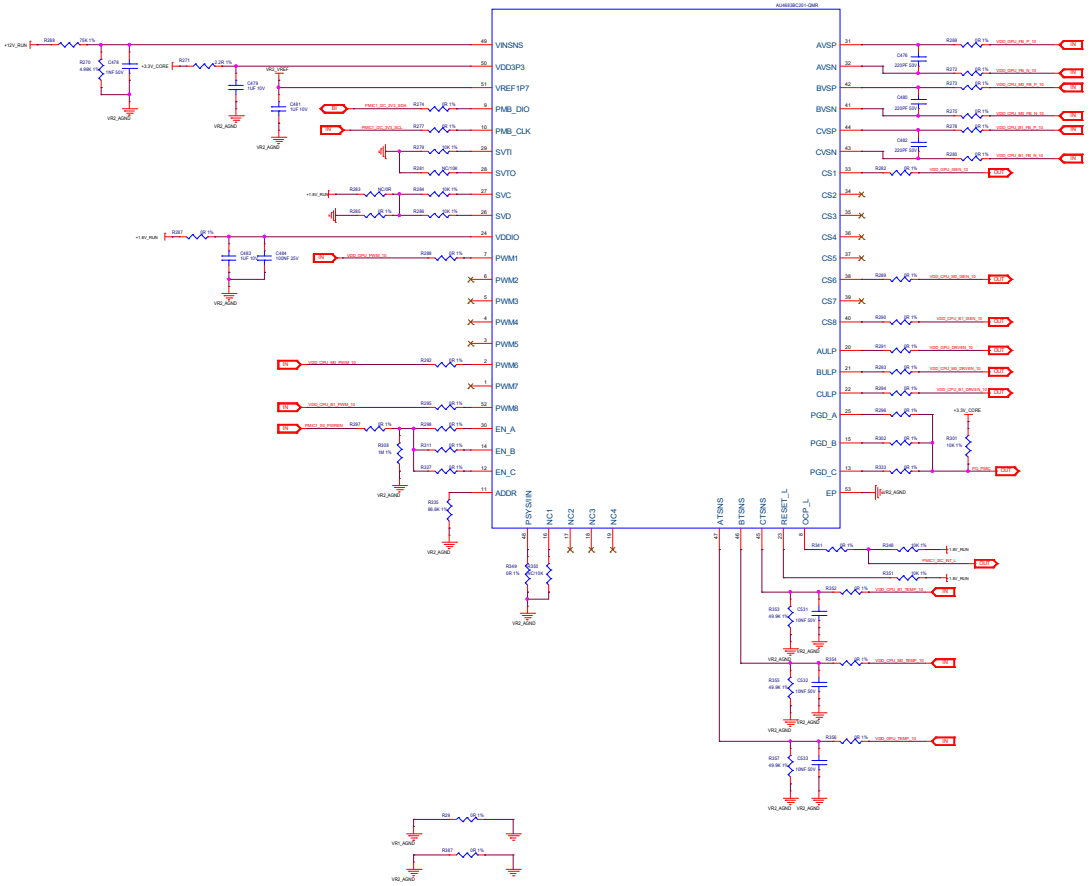

radxa

Size	Title: RS602	REV
Custom	Page Name: 35 VCORE_CONTROLLER	1.11
Date: Thursday, November 30, 2023	Sheet 35 of 46	

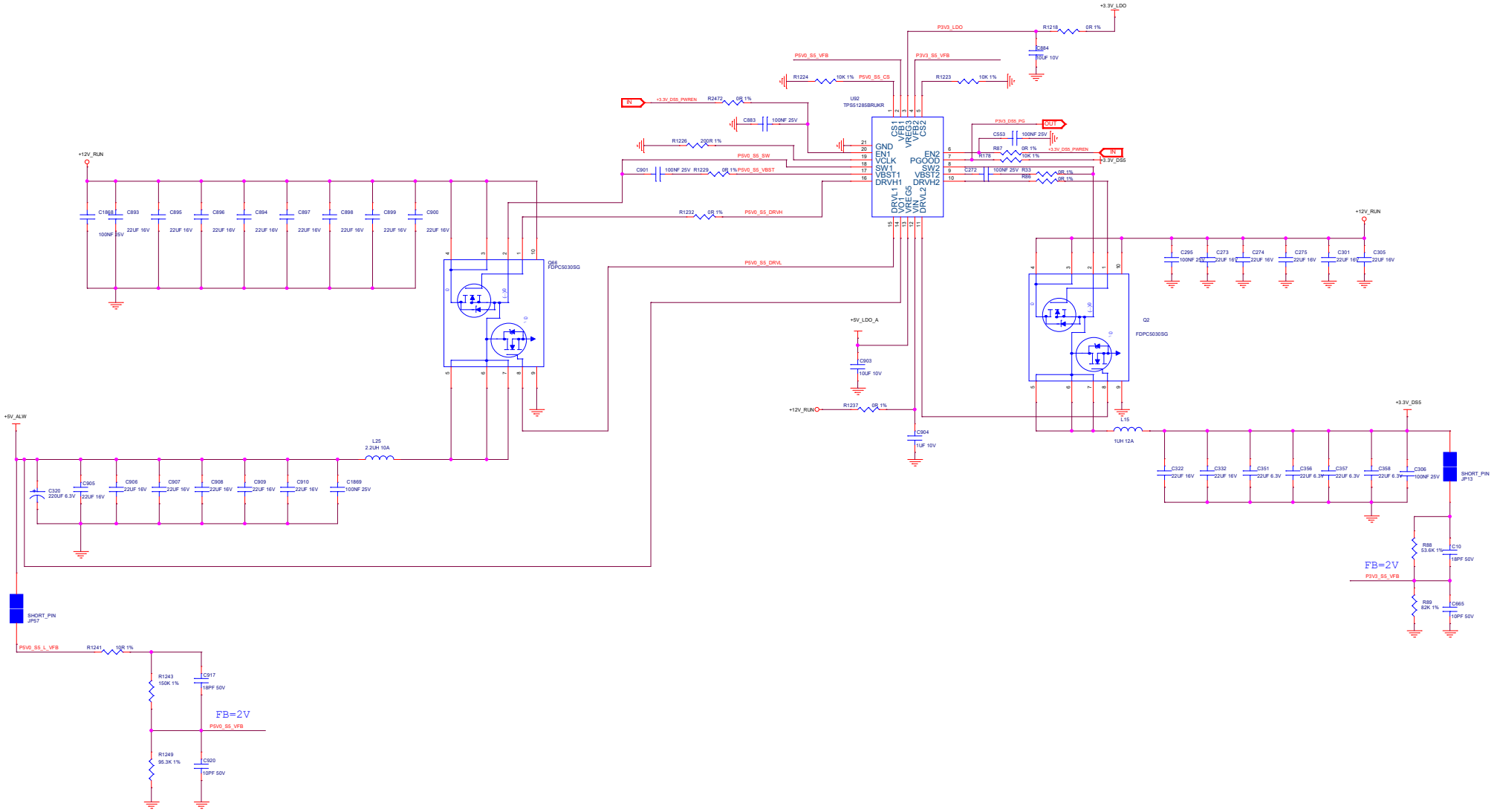

radxa

Size	Title:	RS602	REV
A2	Page Name:	36 SYS +5V_S5/SYS +3.3V_DS5	V1.11
Date: Thursday, November 20, 2025	Sheet 36 of 46		

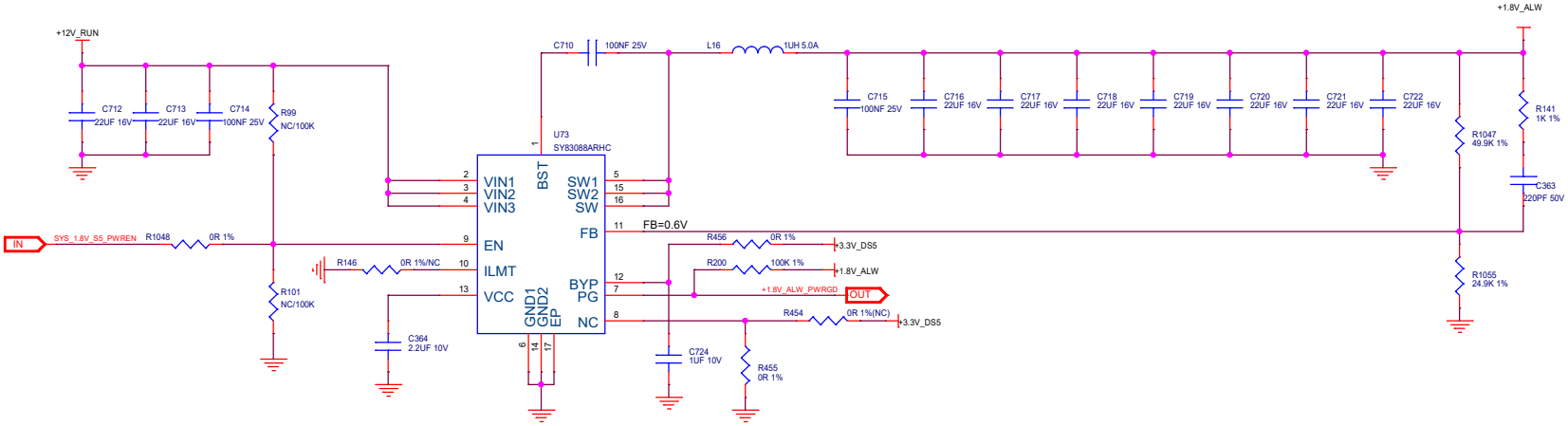

Size	Title:	RS602	REV
A3	Page Name:	37 SYS +1.8V_S5	V1.11
Date:	Thursday, November 20, 2025	Sheet 37 of 46	

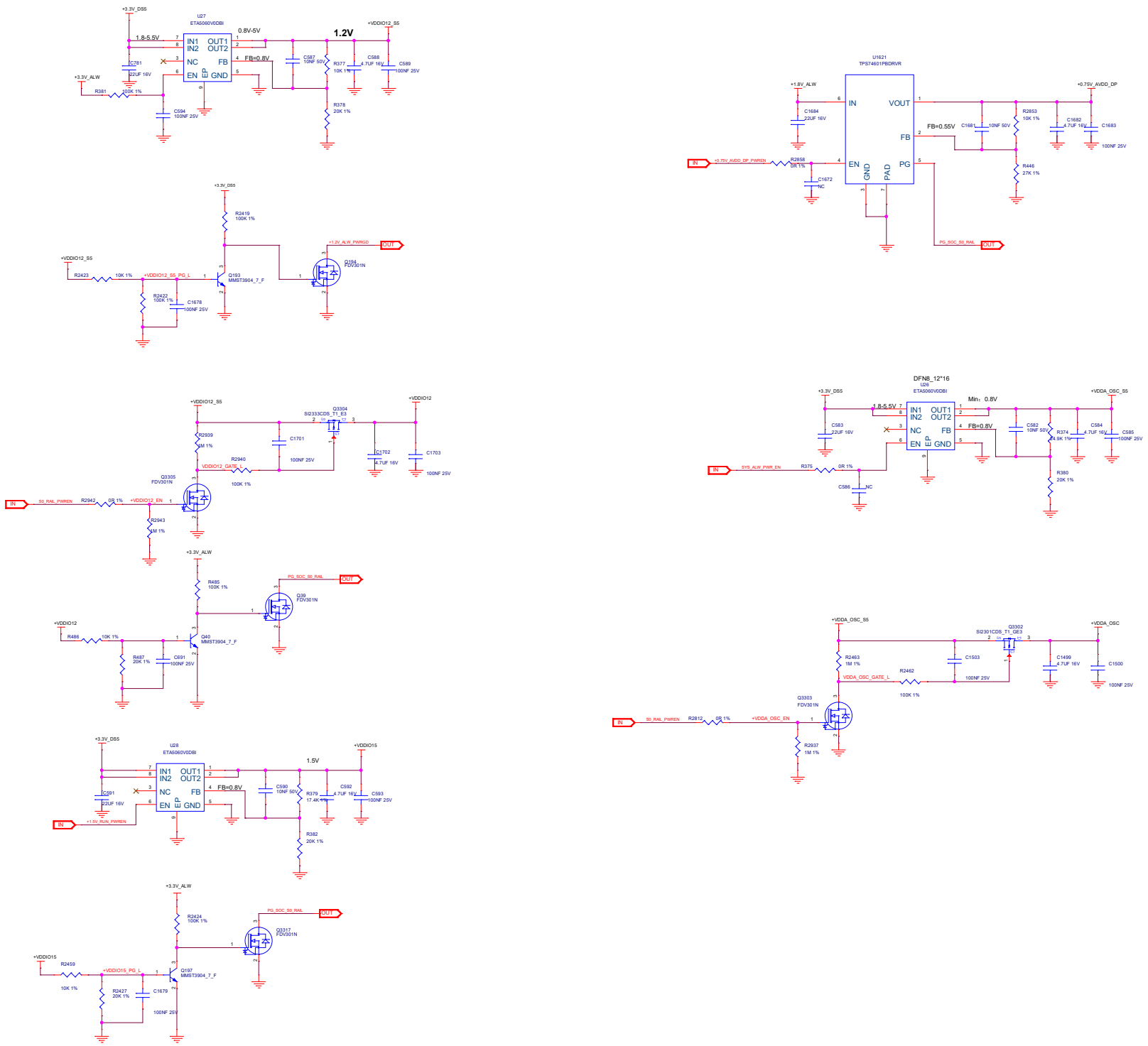

radxa

Size	Title:	RS602	REV
A2	Page Name:	38 +3.3V_LDO/ SOC LDO	V1.11
Date: Thursday, November 20, 2025	Sheet	38 of 46	

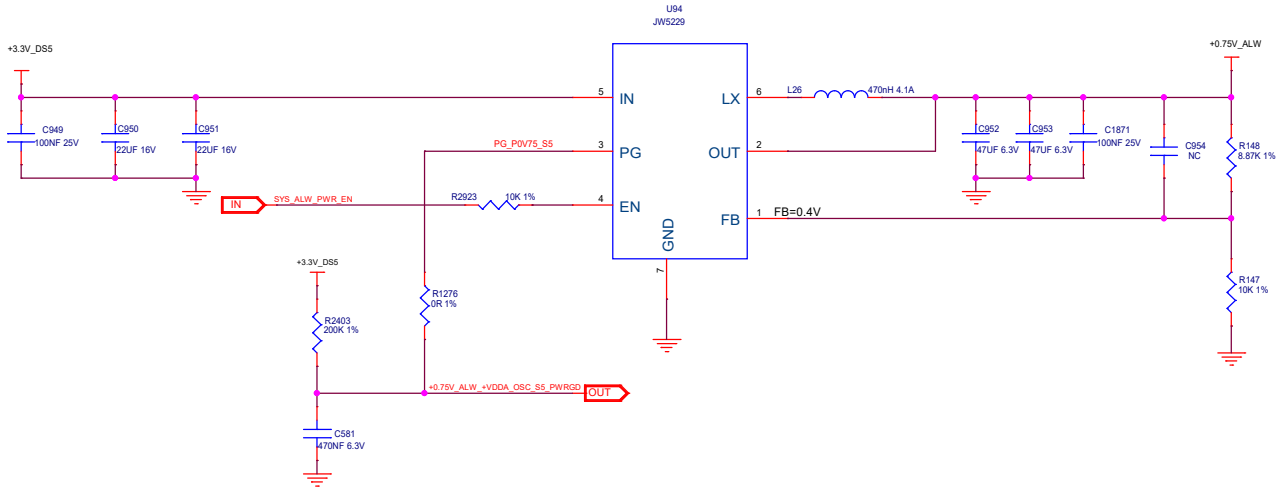

Size	Title:	RS602	REV
A3	Page Name:	39 +0.75V_S5	V1.11
Date:	Thursday, November 20, 2025	Sheet 39 of 46	

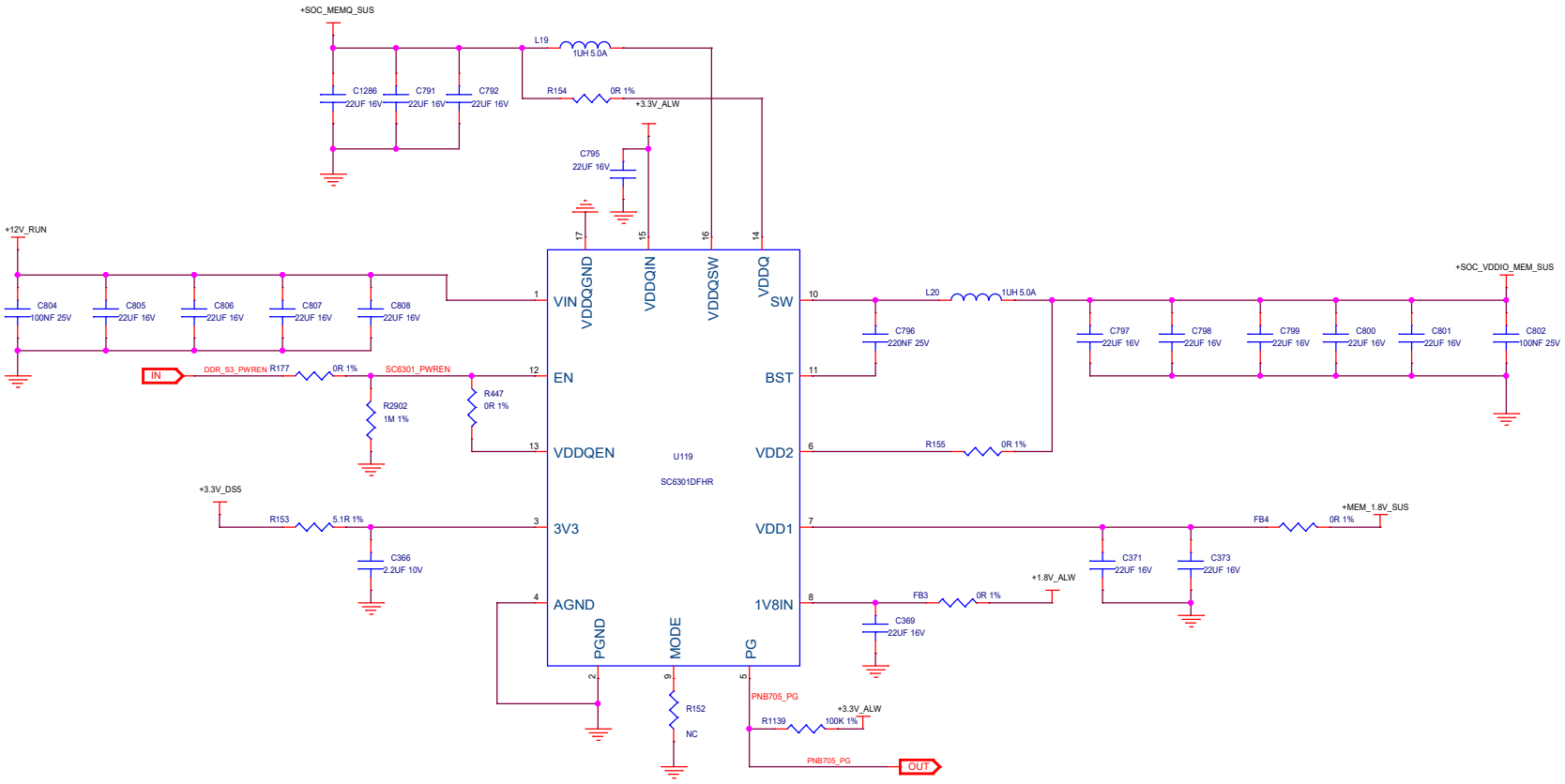

Size	Title:	RS602	REV
A3	Page Name:	40 LPDDR5 VDDQ/VDD1/VDD2	V1.11
Date:	Thursday, November 20, 2025	Sheet 40 of 46	

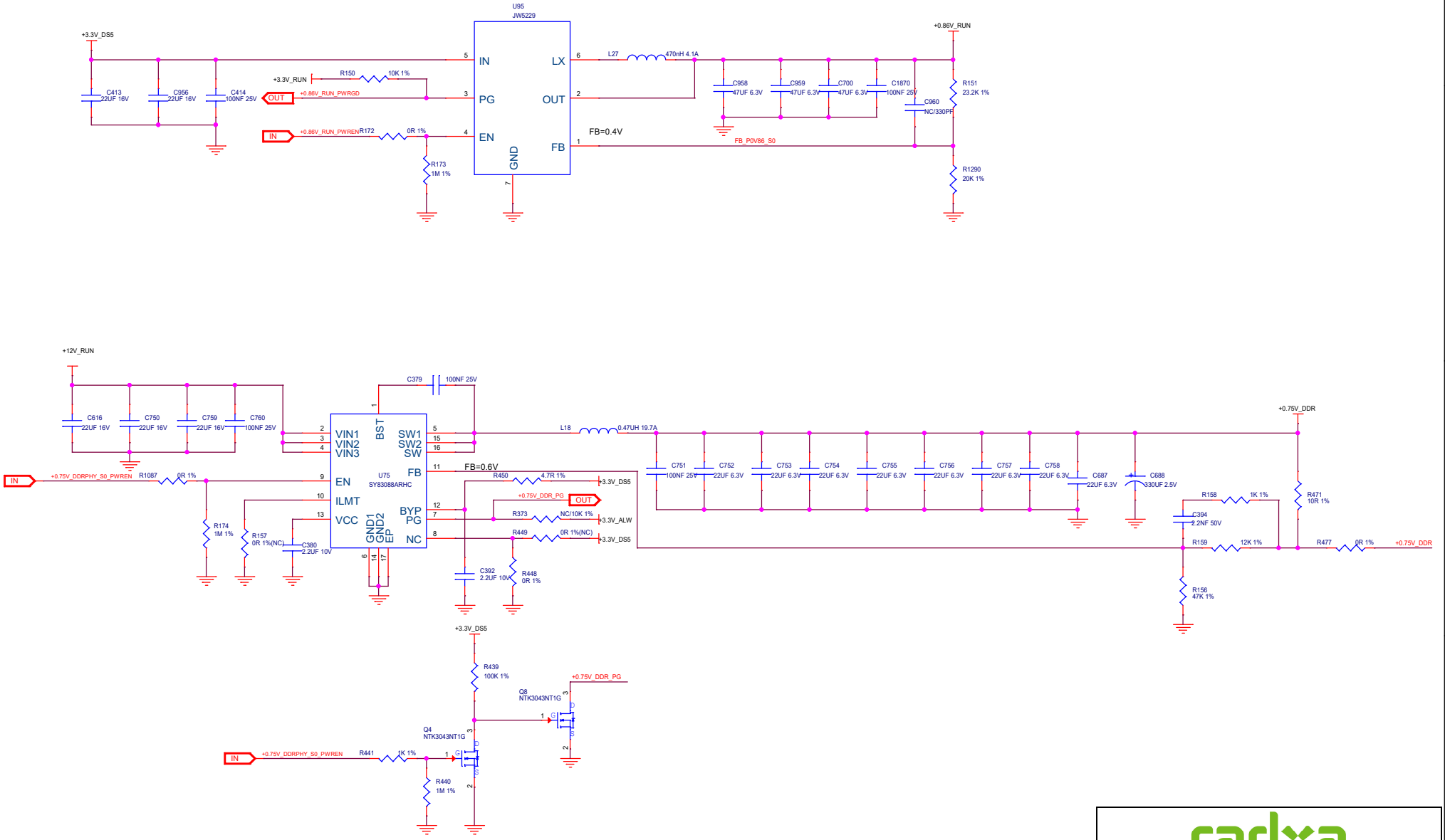

radxa

Size	Title:	RS602	REV
A3	Page Name:	41 +0.86V_S0/+0.75V_DDRPHY	V1.11
Date:	Thursday, November 20, 2025	Sheet 41 of 46	

12V DC IN

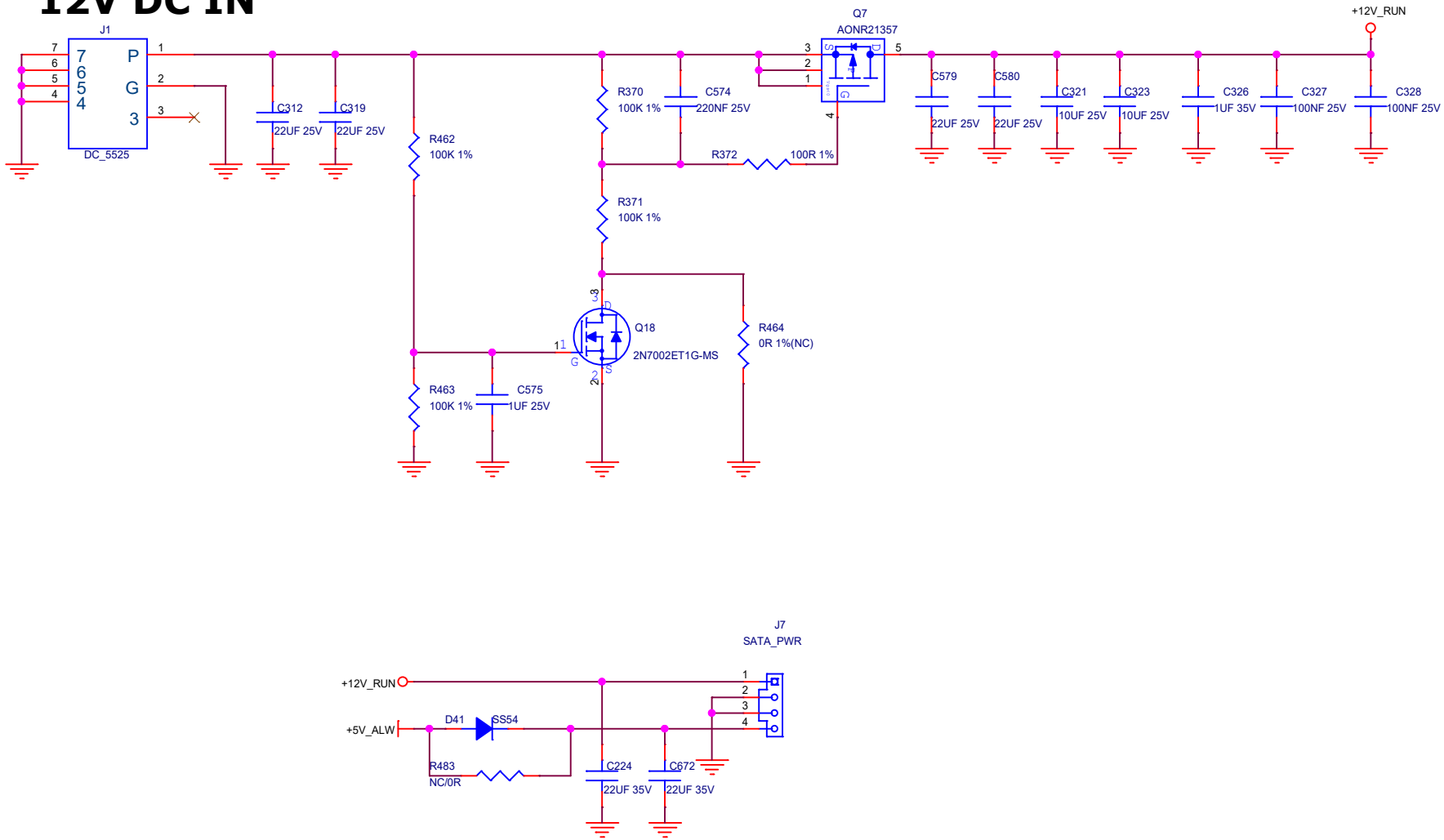

Size	Title:	RS602	REV
A4	Page Name:	42 DC 12V	V1.11
Date:	Thursday, November 20, 2025	Sheet 42 of 46	

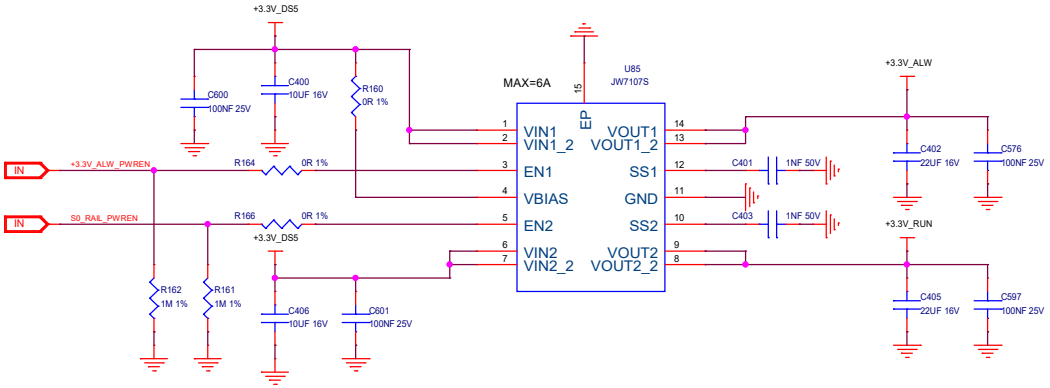

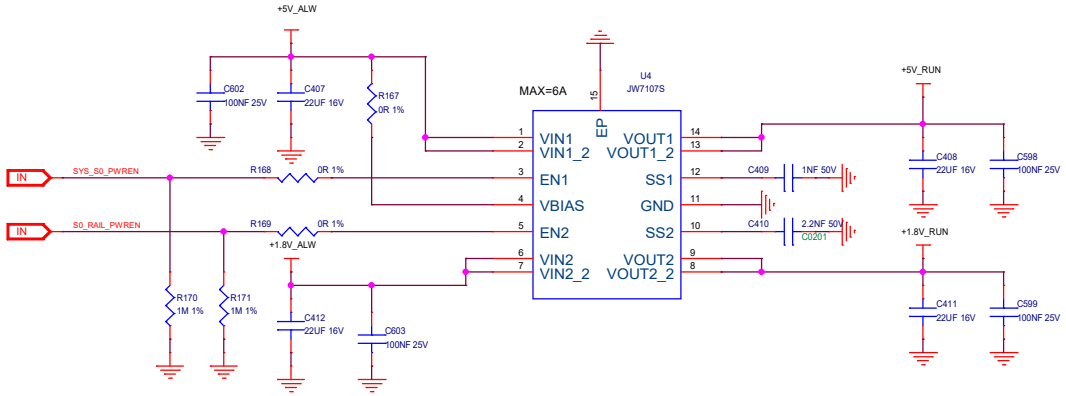

Size	Title:	RS602	REV
A3	Page Name:	43 LOAD SWITCH	V1.11
Date:	Thursday, November 20, 2025	Sheet 43 of 46	

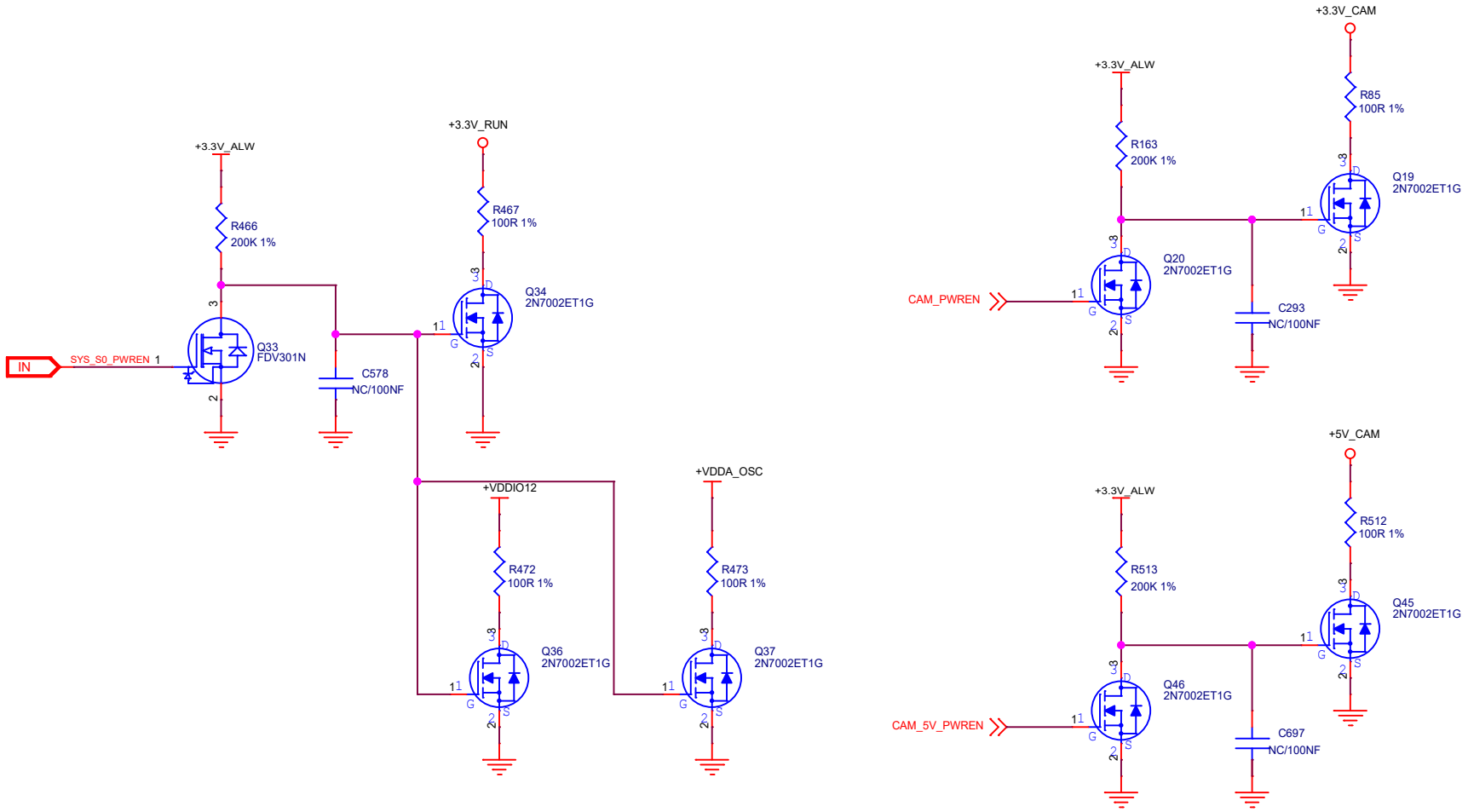

radxa

Size	Title:	RS602	REV
A4	Page Name:	44 Discharge	V1.11
Date:	Thursday, November 20, 2025	Sheet 44 of 46	

POWER KEY

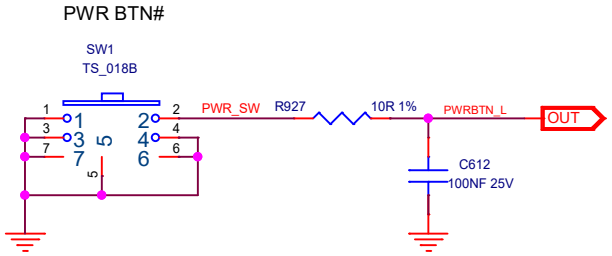

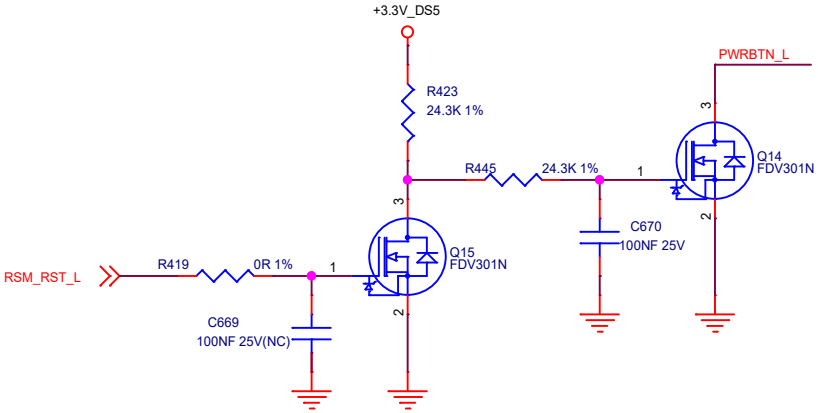

LEDs

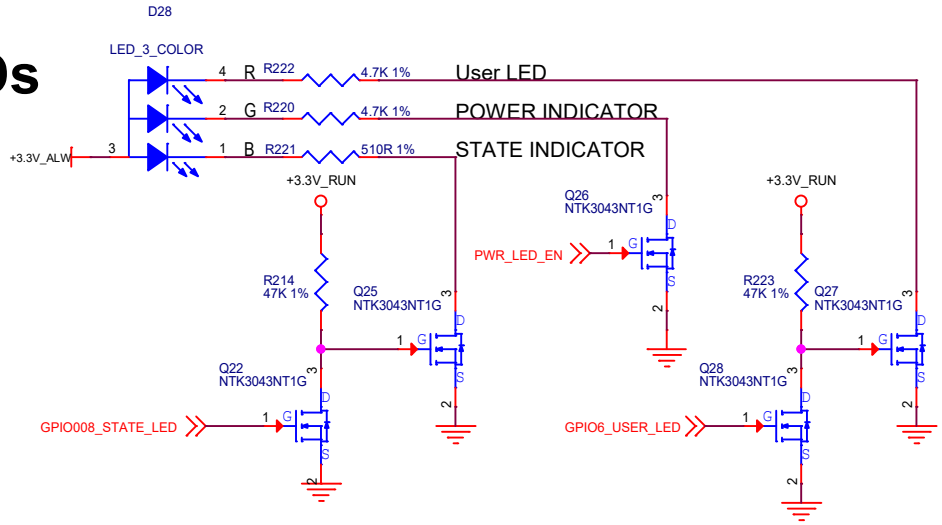

Size	Title:	RS602	REV
A4	Page Name:	45 PWR_BUTTON/LED	V1.11
Date:	Thursday, November 20, 2025	Sheet 45 of 46	

PMIC I2C

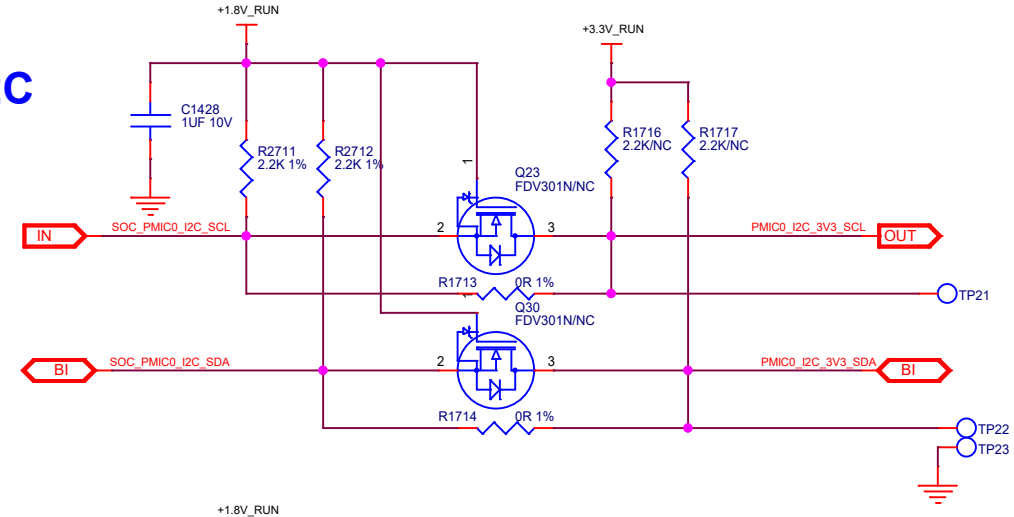

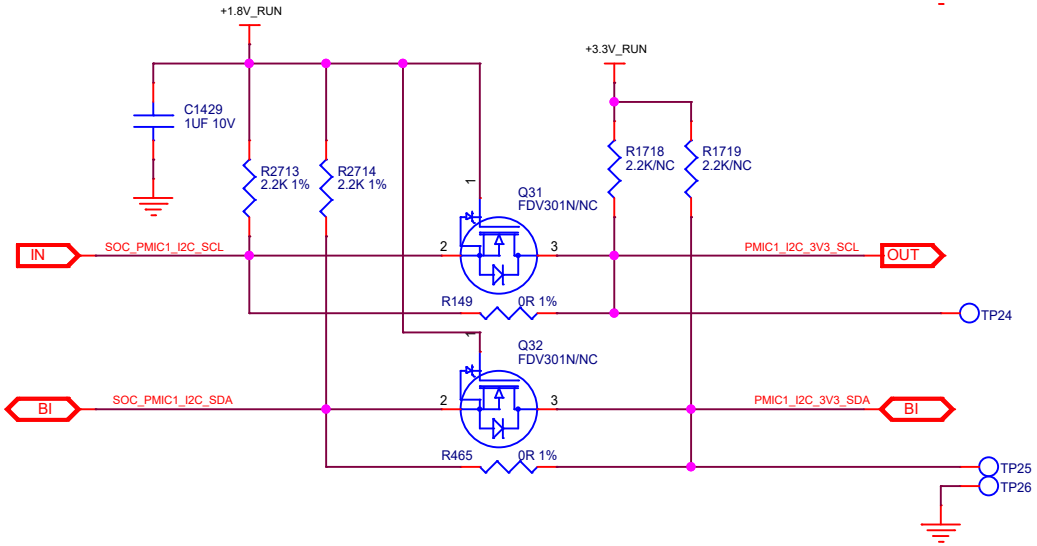

EEPROM

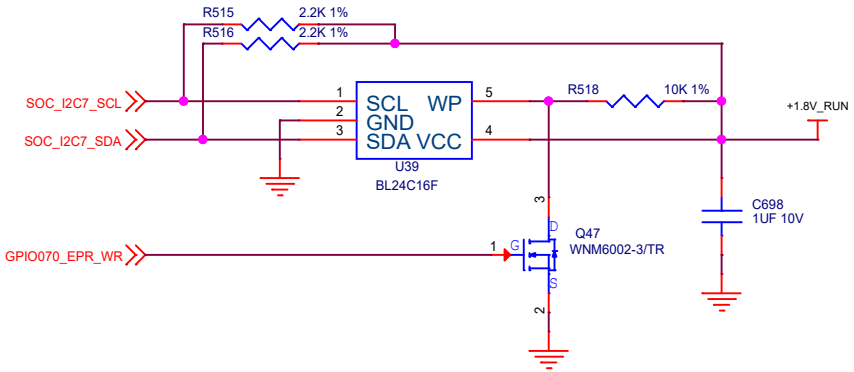

BOARD ID

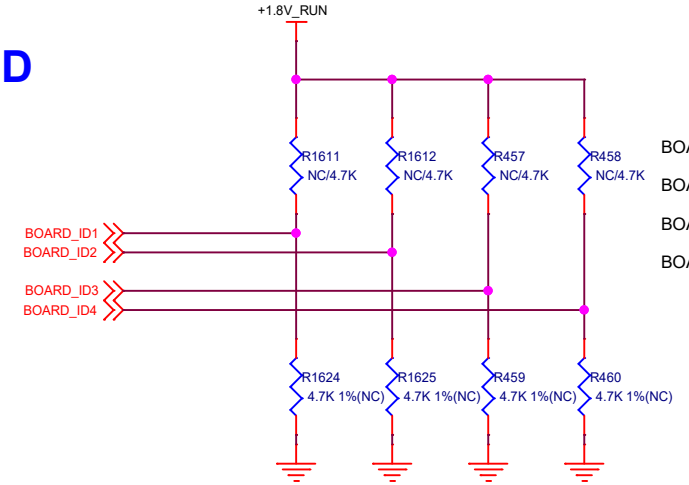

	UP/DOWN（4.7K)
BOARD_ID1	R1611/R1624
BOARD_ID2	R1612/R1625
BOARD_ID3	R457/R459
BOARD_ID4	R458/R460

radxa

Size	Title:	RS602	REV
A4	Page Name:	46 I2C_ID	V1.11
Date: Thursday, November 20, 2025	Sheet 46 of 46		