radxa®

Radxa ROCK 5C Schematic

V2.10

Table of Content

Page 1	COVER
Page 2	02.Index and Notes
Page 3	03.Block Diagram
Page 4	04.RK3588S_Power/GND
Page 5	05.RK3588S_OSC/PLL/PMUIO
Page 6	06.RK3588S DDR Controler
Page 7	07.RK3588S Flash/SD Controller
Page 8	08.RK3588S_SARADC/1.8V GPIO
Page 9	09.RK3588S_MIPI Interface
Page 10	10.RK3588S PCIE2/SATA3/USB3 PHY
Page 11	11.RK3588S GPIO
Page 12	12.DRAM-LPDDR5X_315P_2X32bit
Page 13	13.MICRO HDMI 8K
Page 14	14.USB2/USB3 Port
Page 15	15.USB HUB_FAN
Page 16	16.Ethernet
Page 17	17.MIPI_LCD
Page 18	18.MicroSD Card
Page 19	19.Audio ES8316
Page 20	20.40PIN_CONNECT
Page 21	21.Power-PMIC_RK806-1
Page 22	22.Power_Ext
Page 23	23.Power DC IN
Page 24	24.SPI FLASH/PCIE
Page 25	25.USB_WIFI_FCU760K

5A Tablet Ref Block Diagram

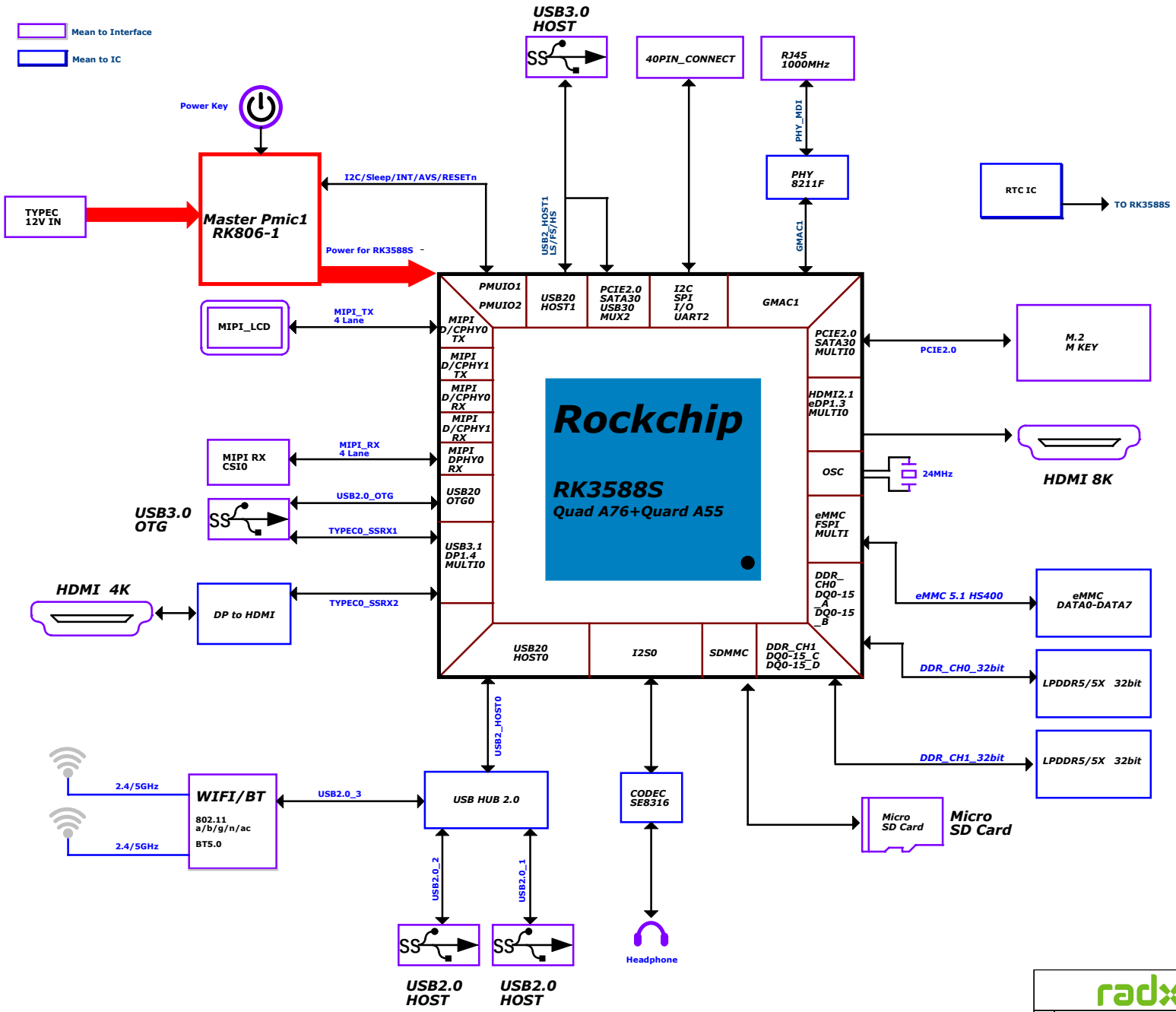

radxa

Size	Title:	ROCK 5C	REV
Custom	Page Name:	03.Block Diagram	2.1
Date: Friday, September 04, 2026	Sheet 3 of 25		

RK3588S(Power&Gnd)

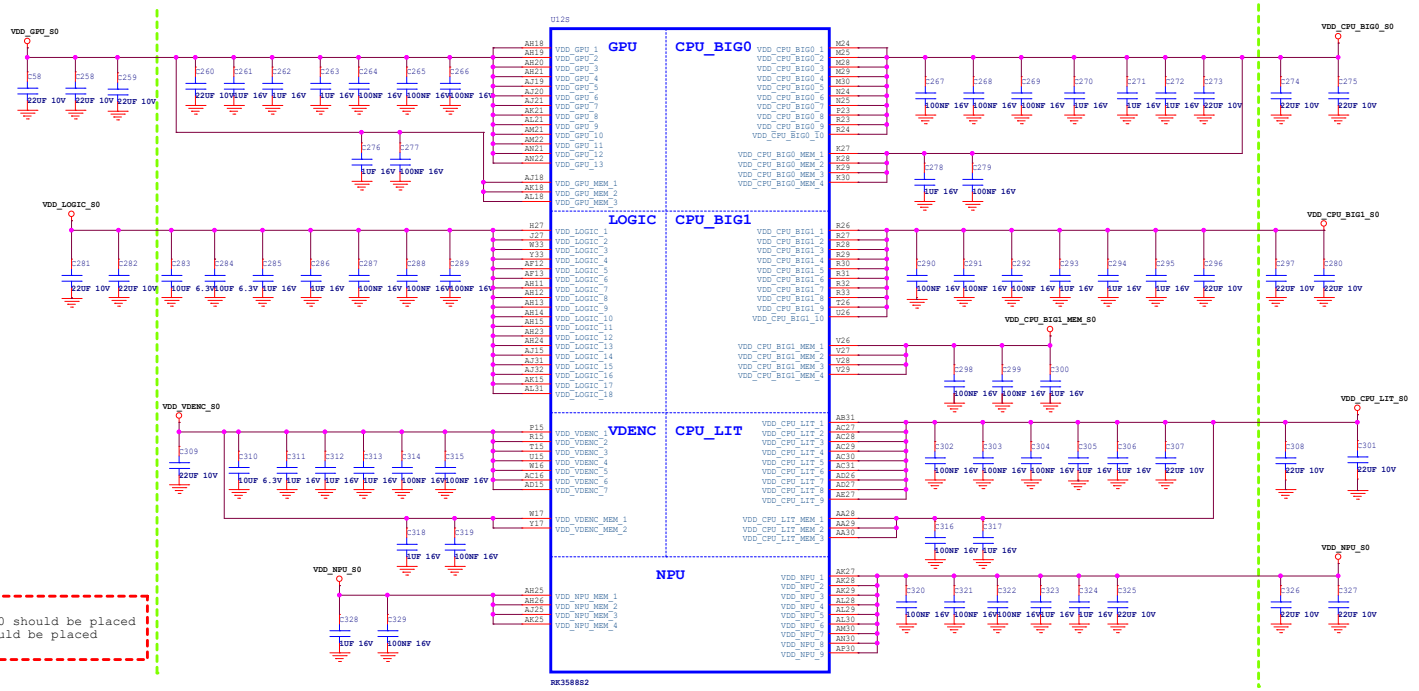

Note:
The Caps between green line and U1000 should be placed under the U1000 package.Other caps should be placed close to the U1000 package

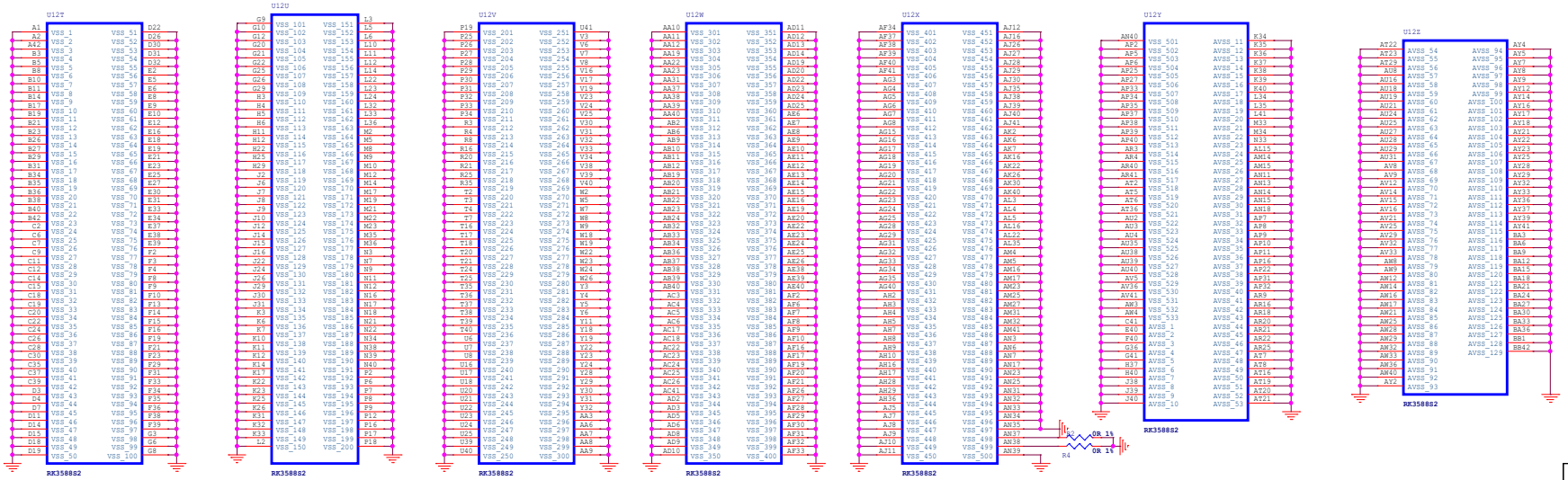

Size	Title:	ROCK 5C	REV
A2	Page Name:	04.RK3588S_Power/GND	2.1
Date: Friday, September 04, 2026	Sheet 4 of 25		

RK3588S(OSC/PLL/PMUIO1)

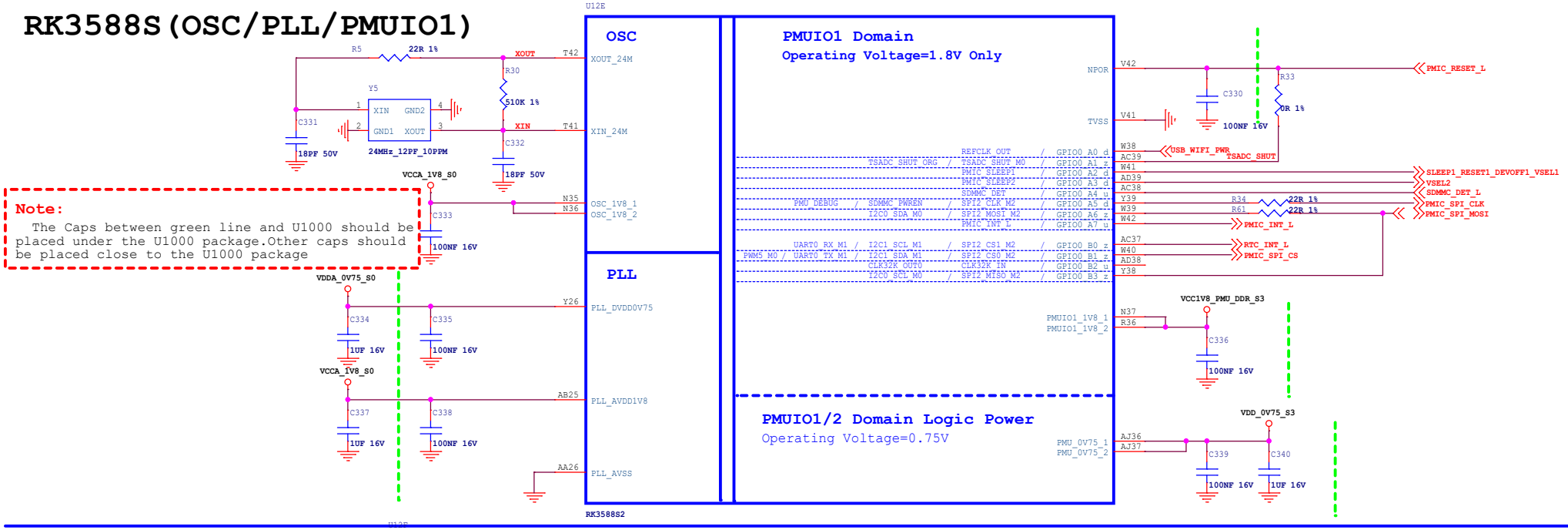

Note:

The Caps between green line and U1000 should be placed under the U1000 package.Other caps should be placed close to the U1000 package

RK3588S(PMUIO2)

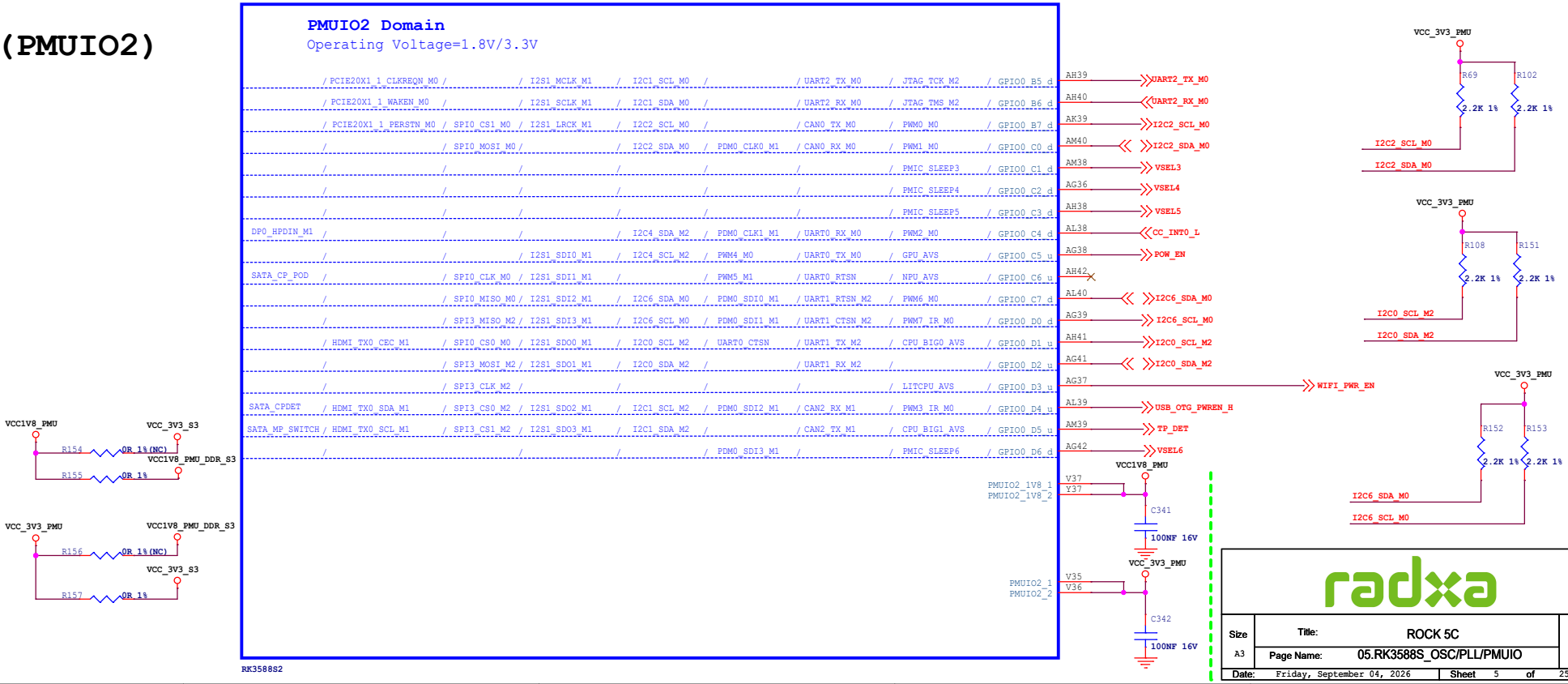

radxa

Size	Title:	ROCK 5C	REV
A3	Page Name:	05.RK3588S_OSC/PLL/PMUIO	2.1
Date: Friday, September 04, 2026		Sheet 5 of 25	

RK3588S(DDR PHY)

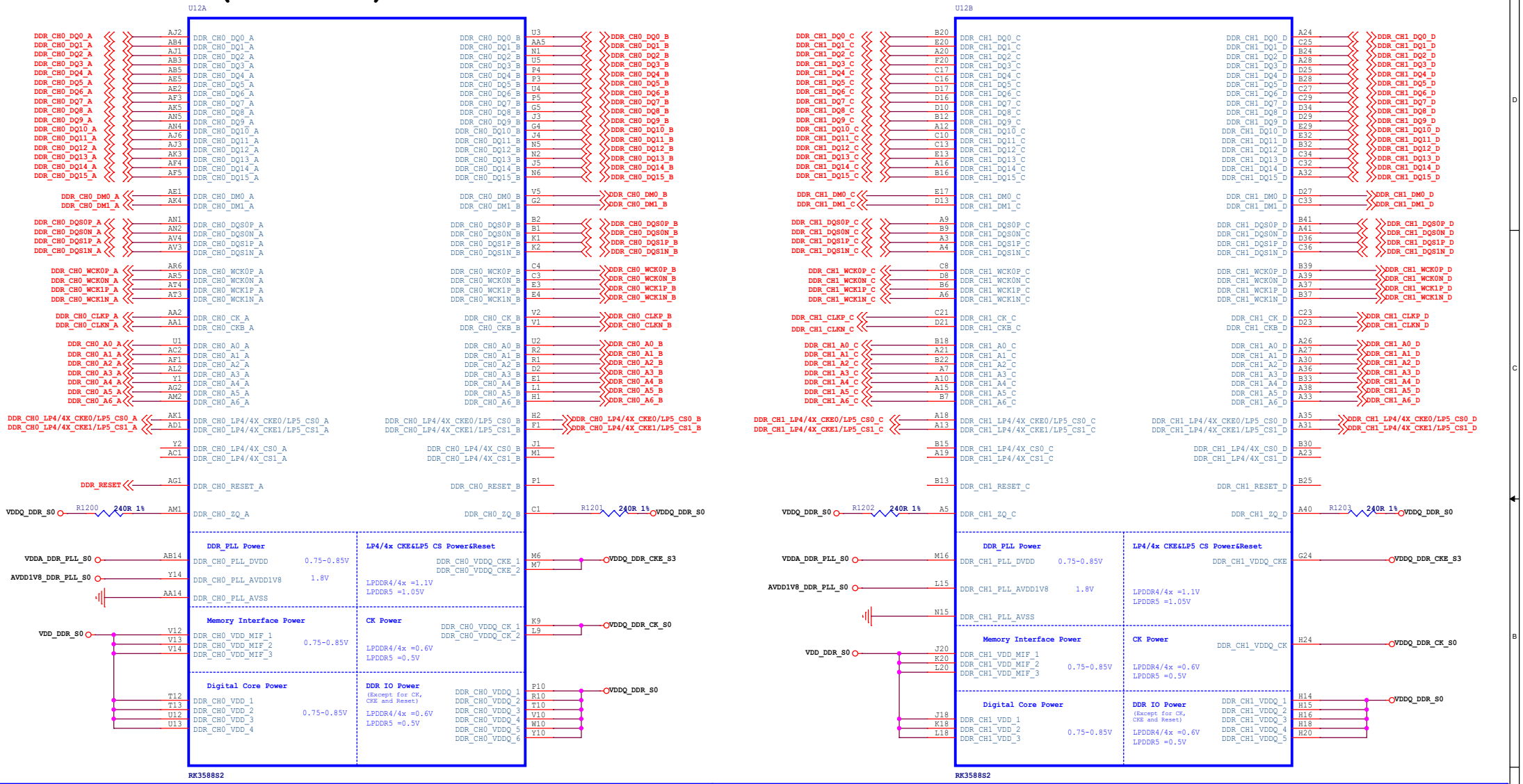

DDR FILTER

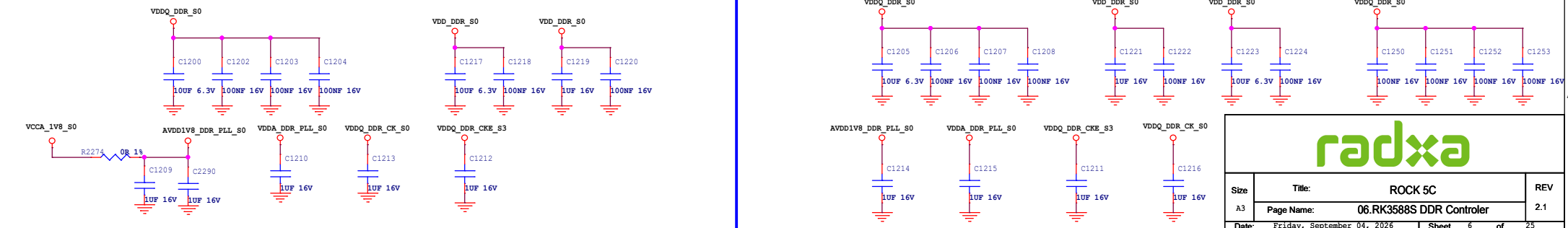

radxa

Size	Title:	ROCK 5C	REV
A3	Page Name:	06.RK3588S DDR Controler	2.1
Date: Friday, September 04, 2026	Sheet 6 of 25		

RK3588S(EMMCIO Domain)

Note:
Caps of between dashed green lines and U1000 should be placed under the U1000 package

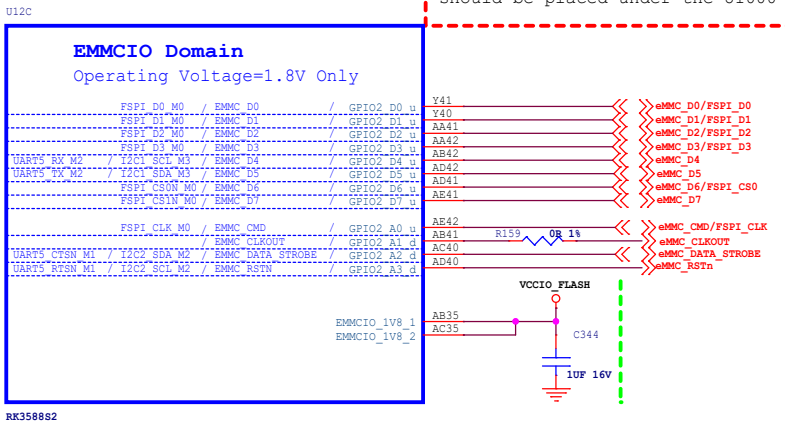

RK3588S(VCCIO2 Domain)

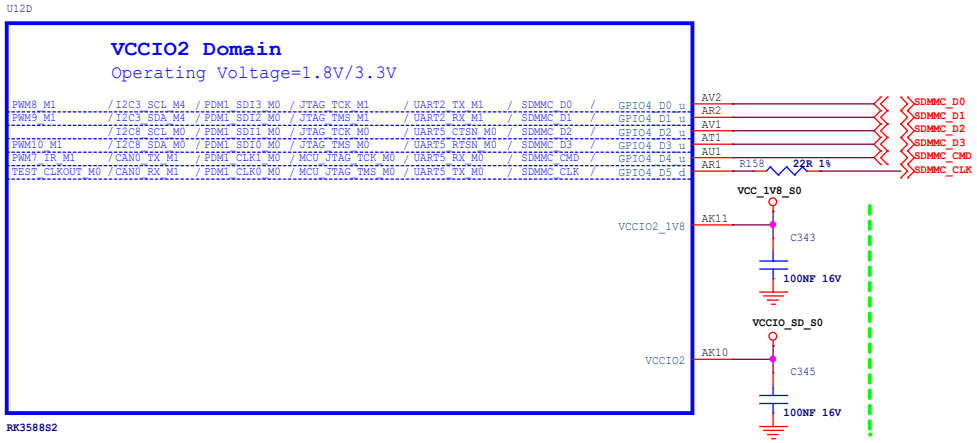

RK3588S(USB3.0/DP1.4)

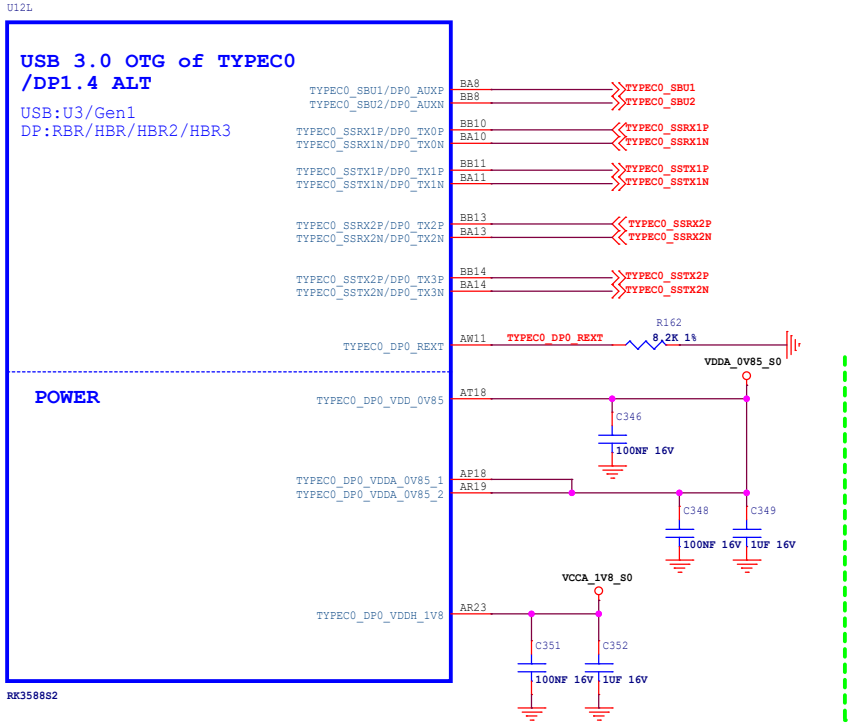

RK3588S(USB2.0)

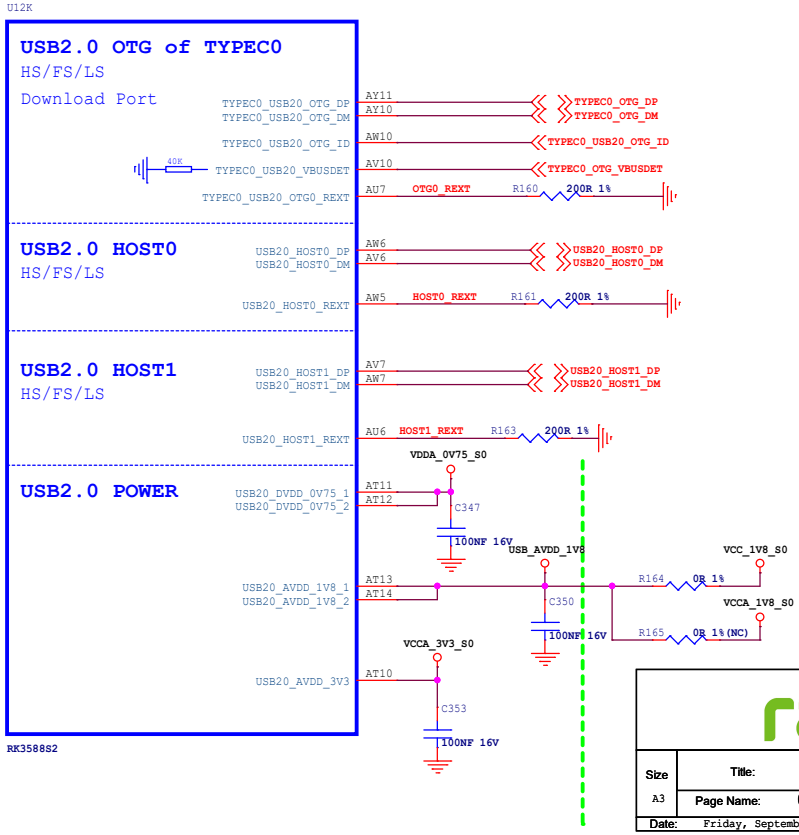

radxa

Size	Title:	ROCK 5C	REV
A3	Page Name:	07.RK3588S Flash/SD Controller	2.1
Date: Friday, September 04, 2026	Sheet 7 of 25		

RK3588S(SARADC/OTP/TSADC)

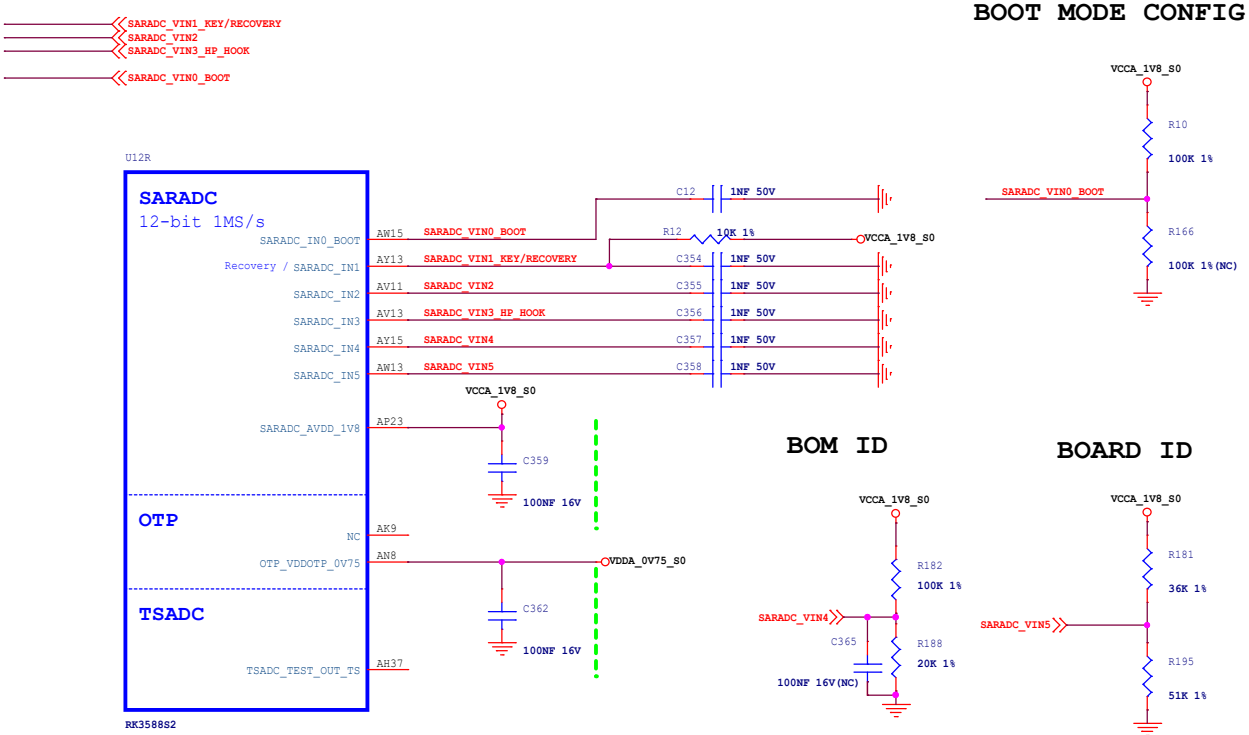

BOOT MODE CONFIG

RK3588S(MIPI_DPHY CSI0 RX)

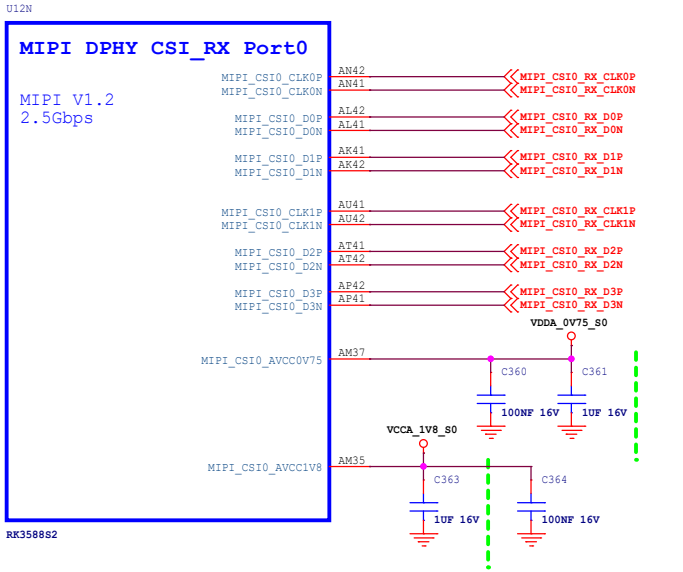

RK3588S(VCCIO1 Domain)

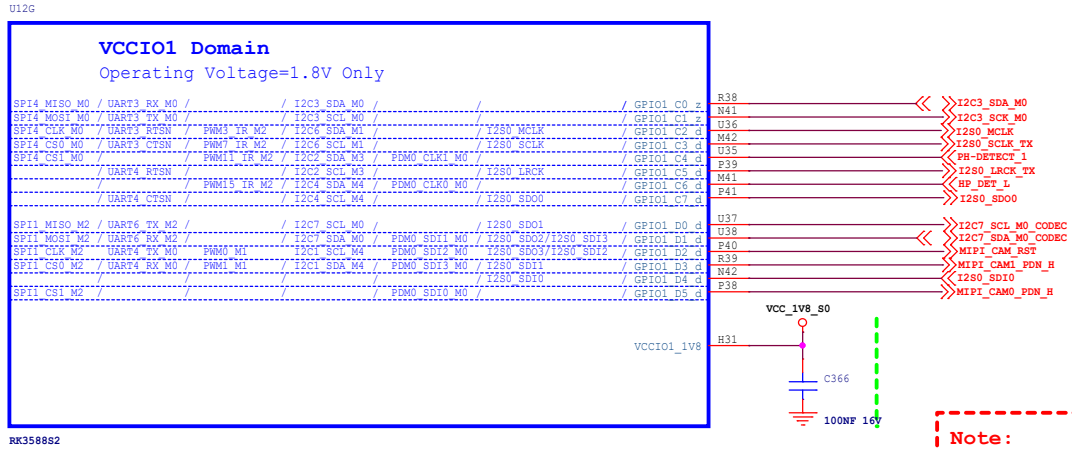

Note:
Caps of between dashed green lines and U1000 should be placed under the U1000 package

radxa

Size	Title:	ROCK 5C	REV
A3	Page Name:	08.RK3588S_SARADC/1.8V GPIO	2.1
Date: Friday, September 04, 2026	Sheet 8 of 25		

RK3588S(MIPI_D/C PHY1)

U12P

MIPI D/C-PHY DSI_TX Port1

D-PHY:V2.0
4.5Gbps/Lane

C-PHY:V1.1
5.7Gbps/Trio

MIPI_DPHY1_TX_CLKP/MIPI_CPHY1_TX_TRIO1_C	BB19
MIPI_DPHY1_TX_CLKN/MIPI_CPHY1_TX_TRIO1_B	BA19
MIPI_DPHY1_TX_D0P/MIPI_CPHY1_TX_TRIO0_B	BB16
MIPI_DPHY1_TX_D0N/MIPI_CPHY1_TX_TRIO0_A	BA16
MIPI_DPHY1_TX_D1P/MIPI_CPHY1_TX_TRIO1_A	BA17
MIPI_DPHY1_TX_D1N/MIPI_CPHY1_TX_TRIO0_C	BB17
MIPI_DPHY1_TX_D2P/MIPI_CPHY1_TX_TRIO2_B	BA20
MIPI_DPHY1_TX_D2N/MIPI_CPHY1_TX_TRIO2_A	BB20
MIPI_DPHY1_TX_D3P/NO_USE	BB22
MIPI_DPHY1_TX_D3N/MIPI_CPHY1_TX_TRIO2_C	BA22

MIPI D/C-PHY CSI_RX Port1

D-PHY:V2.0
4.5Gbps/Lane

C-PHY:V1.1
5.7Gbps/Trio

MIPI_DPHY1_RX_CLKP/MIPI_CPHY1_RX_TRIO1_C	BA26
MIPI_DPHY1_RX_CLKN/MIPI_CPHY1_RX_TRIO1_B	BB26
MIPI_DPHY1_RX_D0P/MIPI_CPHY1_RX_TRIO0_B	BA23
MIPI_DPHY1_RX_D0N/MIPI_CPHY1_RX_TRIO0_A	BB23
MIPI_DPHY1_RX_D1P/MIPI_CPHY1_RX_TRIO1_A	BB25
MIPI_DPHY1_RX_D1N/MIPI_CPHY1_RX_TRIO0_C	BA25
MIPI_DPHY1_RX_D2P/MIPI_CPHY1_RX_TRIO2_B	BB28
MIPI_DPHY1_RX_D2N/MIPI_CPHY1_RX_TRIO2_A	BA28
MIPI_DPHY1_RX_D3P/NO_USE	BA29
MIPI_DPHY1_RX_D3N/MIPI_CPHY1_RX_TRIO2_C	BB29

Power

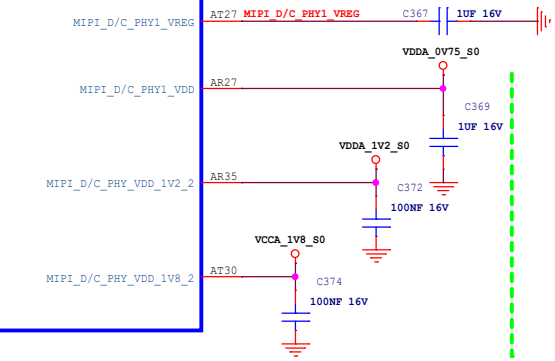

RK3588S2

RK3588S(MIPI_D/C PHY0)

U12O

MIPI D/C-PHY DSI_TX Port0

D-PHY:V2.0
4.5Gbps/Lane

C-PHY:V1.1
5.7Gbps/Trio

MIPI_DPHY0_TX_CLKP/MIPI_CPHY0_TX_TRIO1_C	BB34 MIPI_DPHY0_TX_CLKP/MIPI_CPHY0_TX_TRIO1_C	MIPI_DPHY0_TX_CLKP
MIPI_DPHY0_TX_CLKN/MIPI_CPHY0_TX_TRIO1_B	BA34 MIPI_DPHY0_TX_CLKN/MIPI_CPHY0_TX_TRIO1_B	MIPI_DPHY0_TX_CLKN
MIPI_DPHY0_TX_D0P/MIPI_CPHY0_TX_TRIO0_B	BB31 MIPI_DPHY0_TX_D0P/MIPI_CPHY0_TX_TRIO0_B	MIPI_DPHY0_TX_D0P
MIPI_DPHY0_TX_D0N/MIPI_CPHY0_TX_TRIO0_A	BA31 MIPI_DPHY0_TX_D0N/MIPI_CPHY0_TX_TRIO0_A	MIPI_DPHY0_TX_D0N
MIPI_DPHY0_TX_D1P/MIPI_CPHY0_TX_TRIO1_A	BA32 MIPI_DPHY0_TX_D1P/MIPI_CPHY0_TX_TRIO1_A	MIPI_DPHY0_TX_D1P
MIPI_DPHY0_TX_D1N/MIPI_CPHY0_TX_TRIO0_C	BB32 MIPI_DPHY0_TX_D1N/MIPI_CPHY0_TX_TRIO0_C	MIPI_DPHY0_TX_D1N
MIPI_DPHY0_TX_D2P/MIPI_CPHY0_TX_TRIO2_B	BA35 MIPI_DPHY0_TX_D2P/MIPI_CPHY0_TX_TRIO2_B	MIPI_DPHY0_TX_D2P
MIPI_DPHY0_TX_D2N/MIPI_CPHY0_TX_TRIO2_A	BB35 MIPI_DPHY0_TX_D2N/MIPI_CPHY0_TX_TRIO2_A	MIPI_DPHY0_TX_D2N
MIPI_DPHY0_TX_D3P/NO_USE	BB37 MIPI_DPHY0_TX_D3P	MIPI_DPHY0_TX_D3P
MIPI_DPHY0_TX_D3N/MIPI_CPHY0_TX_TRIO2_C	BA37 MIPI_DPHY0_TX_D3N/MIPI_CPHY0_TX_TRIO2_C	MIPI_DPHY0_TX_D3N

MIPI D/C-PHY CSI_RX Port0

D-PHY:V2.0
4.5Gbps/Lane

C-PHY:V1.1
5.7Gbps/Trio

MIPI_DPHY0_RX_CLKP/MIPI_CPHY0_RX_TRIO1_C	BB41
MIPI_DPHY0_RX_CLKN/MIPI_CPHY0_RX_TRIO1_B	BA41
MIPI_DPHY0_RX_D0P/MIPI_CPHY0_RX_TRIO0_B	BA38
MIPI_DPHY0_RX_D0N/MIPI_CPHY0_RX_TRIO0_A	BB38
MIPI_DPHY0_RX_D1P/MIPI_CPHY0_RX_TRIO1_A	BA40
MIPI_DPHY0_RX_D1N/MIPI_CPHY0_RX_TRIO0_C	AY40
MIPI_DPHY0_RX_D2P/MIPI_CPHY0_RX_TRIO2_B	AY42
MIPI_DPHY0_RX_D2N/MIPI_CPHY0_RX_TRIO2_A	BA42
MIPI_DPHY0_RX_D3P/NO_USE	AW41
MIPI_DPHY0_RX_D3N/MIPI_CPHY0_RX_TRIO2_C	AW42

Power

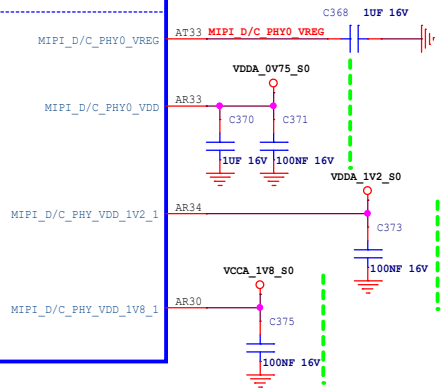

RK3588S2

Size	Title:	REV
A3	ROCK 5C	2.1
	Page Name: 09.RK3588S_MIPI Interface	
Date: Friday, September 04, 2026	Sheet 9 of 25	

RK3588S(PCIE20/SATA30/USB30)

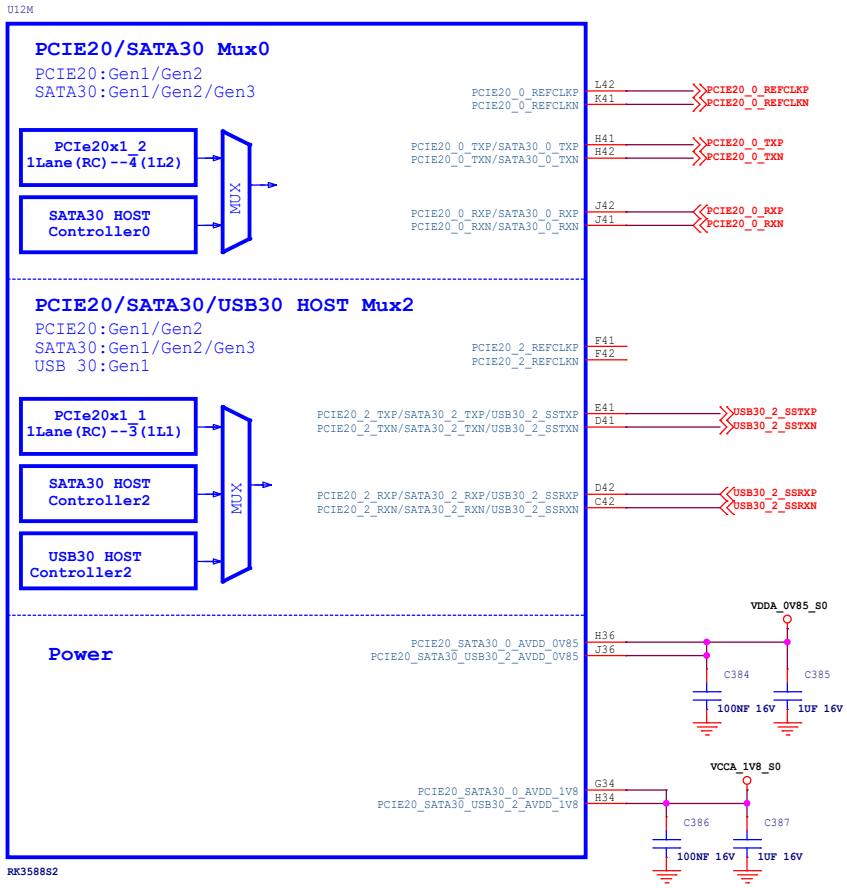

RK3588S(HDMI2.1 TX/eDP1.3 TX)

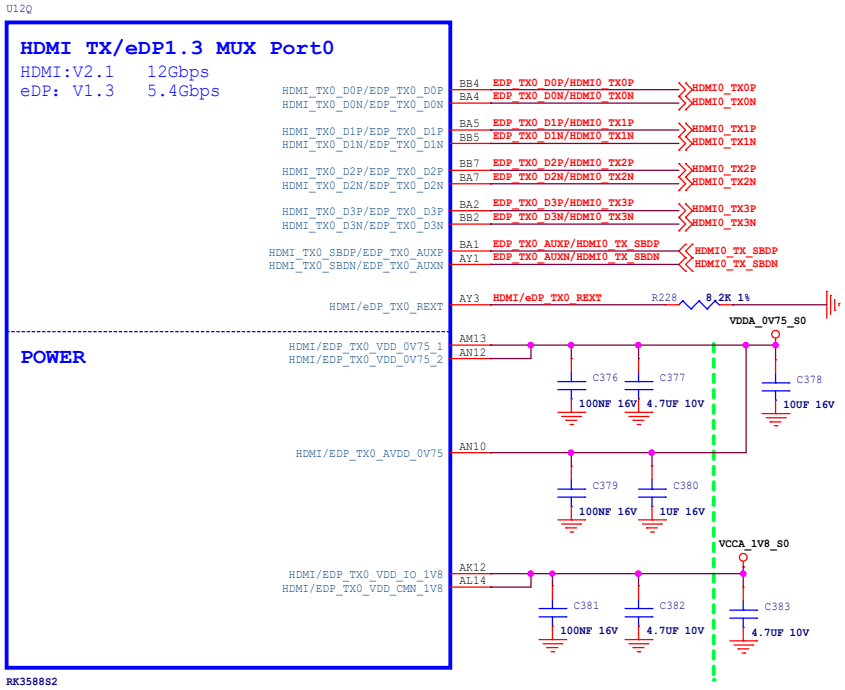

Size	Title:	REV
A3	ROCK 5C	2.1
	Page Name: 10.RK3588S PCIE2/SATA3/USB3 PHY	
Date: Friday, September 04, 2026	Sheet 10 of 25	

RK3588S(VCCIO4 Domain)

U12H

VCCIO4 Domain
Operating Voltage=1.8V/3.3V

	PCIE20X1_1_CLKREQN_M2	DP0_HPDIN_M2	UART6_RX_M1	SPI4_MISO_M2	I2C2_SDA_M4	GPIO1_A0_d	G40	SPI4_MISO_M2	
	PCIE20X1_1_WAKEN_M2		UART6_TX_M1	SPI4_MOSI_M2	I2C2_SCL_M4	GPIO1_A1_u	L40	SPI4_MOSI_M2	
PWM0_M2		VOP_POST_EMPTY	UART6_RTSN_M1	SPI4_CLK_M2	I2C4_SDA_M3	GPIO1_A2_d	D38	SPI4_CLK_M2	
PWM1_M2			UART6_CTSN_M1	SPI4_CS0_M2	I2C4_SCL_M3	GPIO1_A3_d	L39	SPI4_CS0_M2	
				SPI2_MISO_M0		GPIO1_A4_d	G37	SPI1_A4	
		HDMI_TX0_HPD_M0		SPI2_MOSI_M0		GPIO1_A5_d	M40	SPI2_MOSI_M0	
				SPI2_CLK_M0		GPIO1_A6_d	D39		
PWM3_IR_M3	PCIE20X1_1_PERSTN_M2			SPI2_CS0_M0	PDM1_SDI0_M1	GPIO1_A7_u	H38	GPIO1_A7	
				SPI2_CS1_M0	PDM1_SDI1_M1	GPIO1_B0_u	H39	SPI2_CS1_M0	
				SPI0_MISO_M2	PDM1_SDI2_M1	GPIO1_B1_d	G39	SPI0_MISO_M2	
			UART4_RX_M2	SPI0_MOSI_M2	PDM1_SDI3_M1	GPIO1_B2_d	M38	SPI0_MOSI_M2	
		SATA0_ACT_LED_M1	UART4_TX_M2	SPI0_CLK_M2	PDM1_CLK1_M1	GPIO1_B3_d	M37	SPI0_CLK_M2	
			UART7_RX_M2	SPI0_CS0_M2	PDM1_CLK0_M1	GPIO1_B4_u	M39	SPI0_CS0_M2	
			UART7_TX_M2	SPI0_CS1_M2		GPIO1_B5_u	D40	SPI0_CS1_M2	
		MIPI_CAMERA1_CLK_M0	UART1_TX_M1	SPDIF0_TX_M0	I2C5_SCL_M3	GPIO1_B6_u	L38	MIPI_CAMERA1_CLK_M0	
PWM13_M2	SATA2_ACT_LED_M1	MIPI_CAMERA2_CLK_M0	UART1_RX_M1	SPDIF1_TX_M0	I2C5_SDA_M3	GPIO1_B7_u	F37	MIPI_CAMERA2_CLK_M0	
PWM14_M2		MIPI_CAMERA3_CLK_M0	UART1_RTSN_M1		I2C8_SCL_M2	GPIO1_D6_u	L37	I2C8_SCL_M2	
PWM15_IR_M3		MIPI_CAMERA4_CLK_M0	UART1_CTSN_M1		I2C8_SDA_M2	GPIO1_D7_u	G38	I2C8_SDA_M2	

VCCIO4_1V8_1
VCCIO4_1V8_2
G27
G28
C388
100NF 16V
VCCIO4_S0
VCCIO4
G31
C390
100NF 16V

R231 0R 1%(NC) VCC_1V8_S0
R232 0R 1% VCC_1V8_S0
R233 0R 1%(NC) VCC_3V3_S0
R234 0R 1% VCC_3V3_S0

VCCIO4_S0
R229 2.2K 1%
R230 2.2K 1%
I2C8_SCL_M2
I2C8_SDA_M2

RK3588S2

RK3588S(VCCIO6 Domain)

U12J

VCCIO6 Domain
Operating Voltage=1.8V/3.3V

	BT1120_D0	CIF_D0		I2S1_MCLK_M0	UART9_RTSN_M1	SPI0_MISO_M1	PCIE20X1_1_CLKREQN_M1	GPIO4_A0_d	AV19	I2S1_MCLK_M0
	BT1120_D1	CIF_D1		I2S1_SCLK_M0	UART9_CTSN_M1	SPI0_MOSI_M1	PCIE20X1_1_WAKEN_M1	GPIO4_A1_d	AW18	I2S1_SCLK_M0
	BT1120_D2	CIF_D2		I2S1_LRCK_M0		SPI0_CLK_M1	PCIE20X1_1_PERSTN_M1	GPIO4_A2_d	AV26	I2S1_LRCK_M0
	BT1120_D3	CIF_D3			UART9_TX_M2			GPIO4_A3_d	AV19	VCC_5V0_PWREN_H
	BT1120_D4	CIF_D4			UART9_RX_M2	SPI2_MISO_M1	I2C3_SCL_M2	GPIO4_A4_d	AW19	LCD_PWREN_H
	BT1120_D5	CIF_D5		I2S1_SDI0_M0	UART3_TX_M2	SPI2_MOSI_M1	I2C3_SDA_M2	GPIO4_A5_d	AU15	I2S1_SDI0_M0
	BT1120_D6	CIF_D6		I2S1_SDI1_M0	UART3_RX_M2	SPI2_CLK_M1	I2C5_SCL_M2	GPIO4_A6_d	AV18	I2C5_SCL_M2
	BT1120_D7	CIF_D7		I2S1_SDI2_M0		SPI2_CS0_M1	I2C5_SDA_M2	GPIO4_A7_d	AW26	I2C5_SDA_M2
	BT1120_CLKOUT	CIF_CIKIN		I2S1_SDI3_M0	UART8_TX_M0	SPI2_CS1_M1	I2C6_SDA_M3	GPIO4_B0_d	AW27	GPIO4_B0
SPDIF1_TX_M1		MIPI_CAMERA0_CLK_M0	SATA2_ACT_LED_M0	I2S1_SDO0_M0	UART8_RX_M0	SPI0_CS1_M1	I2C6_SCL_M3	GPIO4_B1_u	AU22	I2S1_SDO0_M0
CAN1_RX_M1	BT1120_D8	CIF_HREF	PWM14_M1	I2S1_SDO1_M0	UART8_RTSN_M0	SPI0_CS0_M1	I2C7_SCL_M3	PCIE20X1_1_BUTTON_RSTN	GPIO4_B2_u	AT15	PWM14_M1
CAN1_TX_M1	BT1120_D9	CIF_VSYNC	PWM15_IR_M1	I2S1_SDO2_M0	UART8_CTSN_M0		I2C7_SDA_M3	PCIE20X1_2_BUTTON_RSTN	GPIO4_B3_u	AV23	PWM15_IR_M1
	BT1120_D10	CIF_CIKOUT	PWM11_IR_M1	I2S1_SDO3_M0	UART9_TX_M1		DP0_HPDIN_M0	SPDIF0_TX_M1	GPIO4_B4_u	AV27	SPDIF0_TX_M1
	BT1120_D11		PWM12_M1		UART9_RX_M1	SPI3_MISO_M1		GPIO4_B5_d	AU23	HSB_HOST_PWREN_H
	BT1120_D12		PWM13_M1			SPI3_MOSI_M1	I2C5_SCL_M1	SATA0_ACT_LED_M0	GPIO4_B6_d	AW22	HDMI0_TX_ON_H
	BT1120_D13			HDMI_TX0_SCL_M0		SPI3_CLK_M1	I2C5_SDA_M1	PCIE20X1_2_CLKREQN_M1	GPIO4_B7_u	AV22	HDMI_TX0_SCL_M0
	BT1120_D14			HDMI_TX0_SDA_M0		SPI3_CS0_M1	I2C8_SCL_M3	PCIE20X1_2_WAKEN_M1	GPIO4_C0_u	AW23	HDMI_TX0_SDA_M0
	BT1120_D15	SPDIF1_TX_M2	PWM6_M1	HDMI_TX0_CEC_M0		SPI3_CS1_M1	I2C8_SDA_M3	PCIE20X1_2_PERSTN_M1	GPIO4_C1_d	AY26	HDMI_TX0_CEC_M0

Note:
BT1120 Only Support Output

VCC_1V8_S0
VCCIO6_1V8
AJ34
C389
100NF 16V
VCC_3V3_S0
VCCIO6_1
VCCIO6_2
AL33
AM33
C391
100NF 16V

RK3588S2

RK3588S(VCCIO5 Domain)

U12I

VCCIO5 Domain
Operating Voltage=1.8V/3.3V

	PWM10_M0	SPI4_MISO_M1	I2C6_SDA_M4	GMAC1_TXD2	I2S3_MCLK	FSPI_D0_M2	SDIO_D0_M1	GPIO3_A0_u	AR38	GMAC1_TXD2_M1
AUDDSM_LN	PWM11_IR_M0	SPI4_MOSI_M1	I2C6_SCL_M4	GMAC1_TXD3	I2S3_SCLK	FSPI_D1_M2	SDIO_D1_M1	GPIO3_A1_u	AR37	GMAC1_TXD3_M1
AUDDSM_LP	UART8_TX_M1	SPI4_CLK_M1		GMAC1_RXD2	I2S3_LRCK	FSPI_D2_M2	SDIO_D2_M1	GPIO3_A2_u	AT38	GMAC1_RXD2_M1
AUDDSM_RN	UART8_RX_M1	SPI4_CS0_M1		GMAC1_RXD3	I2S3_SDO	FSPI_D3_M2	SDIO_D3_M1	GPIO3_A3_u	AT40	GMAC1_RXD3_M1
AUDDSM_RP	UART8_RTSN_M1	SPI4_CS1_M1		GMAC1_TXCLK	I2S3_SDI		SDIO_CMD_M1	GPIO3_A4_d	AT39	GMAC1_TXCLK_M1
	UART8_CTSN_M1		I2C4_SDA_M0	GMAC1_RXCLK		FSPI_CLK_M2	MIPI_CAMERA0_CLK_M1	SDIO_CLK_M1	GPIO3_A5_d	AV38	GMAC1_RXCLK_M1
			I2C4_SCL_M0	ETH1_REFCLKO_25M			MIPI_CAMERA1_CLK_M1		GPIO3_A6_d	AV37	ETH1_REFCLKO_25M_M1
				GMAC1_RXD0			MIPI_CAMERA2_CLK_M1	PWM8_M0	GPIO3_A7_u	AT37	GMAC1_RXD0_M1
				GMAC1_RXD1			MIPI_CAMERA3_CLK_M1	PWM9_M0	GPIO3_B0_u	AR39	GMAC1_RXD1_M1
	UART2_TX_M2			GMAC1_RXDV_CRS			MIPI_CAMERA4_CLK_M1	PWM2_M1	GPIO3_B1_d	AV39	GMAC1_RXDV_CRS_M1
	UART2_RX_M2			GMAC1_TXER	I2S2_SDI_M1			PWM3_IR_M1	GPIO3_B2_d	AM34	FAN-PWM
	UART2_RTSN			GMAC1_TXD0	I2S2_SDO_M1				GPIO3_B3_u	AM35	GMAC1_TXD0_M1
	UART2_CTSN			GMAC1_TXD1	I2S2_MCLK_M1				GPIO3_B4_u	AV35	GMAC1_TXD1_M1
	UART3_TX_M1		CAN1_RX_M0	GMAC1_TXEN	I2S2_SCLK_M1			PWM12_M0	GPIO3_B5_u	AV35	GMAC1_TXEN_M1
	UART3_RX_M1		CAN1_TX_M0	GMAC1_MCLKINOUT	I2S2_LRCK_M1			PWM13_M0	GPIO3_B6_d	AM37	GMAC1_MCLKINOUT_M1
		SPI1_MOSI_M1	I2C3_SCL_M1	GMAC1_PTP_REF_CLK					GPIO3_B7_d	AY34	GMAC1_RSTn_GPIO3_B0
	UART7_TX_M1	SPI1_MISO_M1	I2C3_SDA_M1	GMAC1_PPSTRIG					GPIO3_C0_d	AR36	
	UART7_RX_M1	SPI1_CLK_M1		GMAC1_PPSCLK					GPIO3_C1_d	AM38	LCD_RESET
	UART7_RTSN_M1	SPI1_CS0_M1	I2C8_SCL_M4	GMAC1_MDC		MIPI_TE0		PWM14_M0	GPIO3_C2_d	AV40	GMAC1_MDC_M1
	UART7_CTSN_M1	SPI1_CS1_M1	I2C8_SDA_M4	GMAC1_MDIO		MIPI_TE1		PWM15_IR_M0	GPIO3_C3_d	AM39	GMAC1_MDIO_M1
	UART5_TX_M1	SPI3_CS0_M3	CAN2_RX_M0	CIF_D8		FSPI_CS0N_M2			GPIO3_C4_u	AM34	POWER_LED
	UART5_RX_M1	SPI3_CS1_M3	CAN2_TX_M0	CIF_D9		FSPI_CS1N_M2			GPIO3_C5_u	AY34	TP_RST_L
		SPI3_MISO_M1		CIF_D10					GPIO3_C6_u	AV30	TP_INT_L
		SPI3_MOSI_M1	I2C5_SCL_M0	CIF_D11	PCIE20X1_2_CLKREQN_M0	HDMI_TX0_SCL_M2			GPIO3_C7_u	AU30	PCIE20x1_2_CLKREQn_M0
	UART4_RX_M1	SPI3_CLK_M3	I2C5_SDA_M0	CIF_D12	PCIE20X1_2_WAKEN_M0	HDMI_TX0_SDA_M2		PWM8_M2	GPIO3_D0_u	AM31	PCIE20x1_2_WAKEn_M0
	UART4_TX_M1	SPI0_MISO_M1		CIF_D13	PCIE20X1_2_PERSTN_M1			PWM9_M2	GPIO3_D1_d	AV27	PCIE20x1_2_PERSTn_M0
	UART9_RTSN_M2	SPI0_MOSI_M3	I2C7_SCL_M2	CIF_D14					GPIO3_D2_d	AY30	MIPI_PWR_EN
	UART9_CTSN_M2	SPI0_CLK_M3	I2C7_SDA_M2	CIF_D15				PWM10_M2	GPIO3_D3_d	AY31	MIPI_LCD_BL
	UART9_RX_M2	SPI0_CS0_M3		MCU_JTAG_TCK_M1		HDMI_TX0_HPD_M1			GPIO3_D4_d	AV31	HDMI_TX0_HPD_M0
	UART9_TX_M2	SPI0_CS1_M3		MCU_JTAG_TMS_M1				PWM11_IR_M3	GPIO3_D5_d	AM30	IO_LED

RESERVED
AF35
VCCIO5_1V8
AF36
VCCIO5_1V8
C392
100NF 16V

R237 0R 1%(NC) VCC_3V3_S0
R238 0R 1% VCC_1V8_S0

VCCIO5
AC33
AC34
VCCIO5_1
VCCIO5_2
C393
100NF 16V

R239 0R 1%(NC) VCC_1V8_S0
R240 0R 1% VCC_3V3_S0

RK3588S2

VCC_3V3_S0
R235 2.2K 1%
R236 2.2K 1%
I2C5_SCL_M2
I2C5_SDA_M2

Note:
Caps of between dashed green lines and U1000 should be placed under the U1000 package

Size A2	Title: ROCK 5C		REV 2.1
	Page Name: 11.RK3588S GPIO		
Date: Friday, September 04, 2026	Sheet 11 of 25		

DRAM-LPDDR5_2X32bit

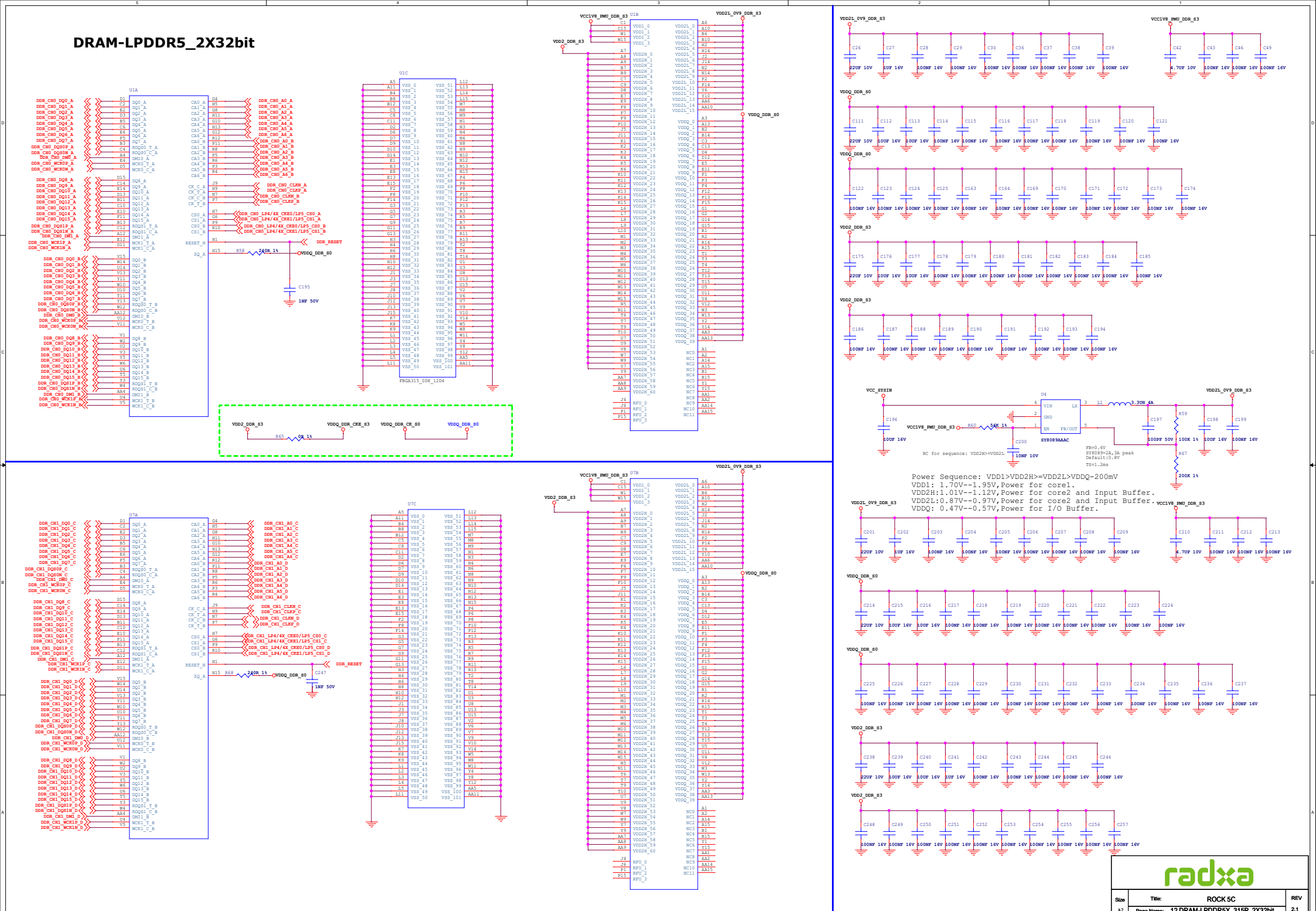

HDMI2.1 TX0

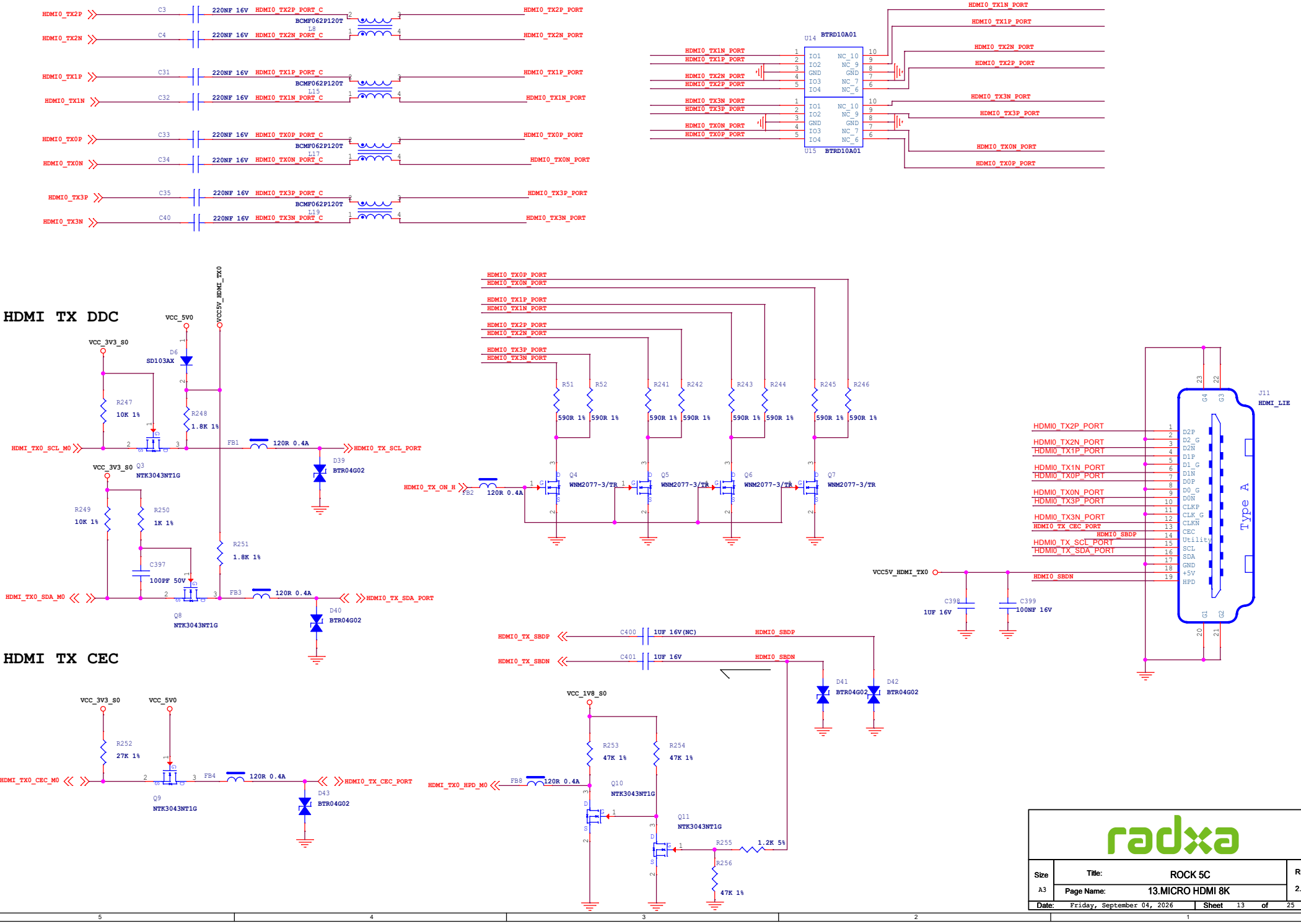

Size	Title:	ROCK 5C	REV
A3	Page Name:	13.MICRO HDMI 8K	2.1
Date: Friday, September 04, 2026		Sheet 13 of 25	

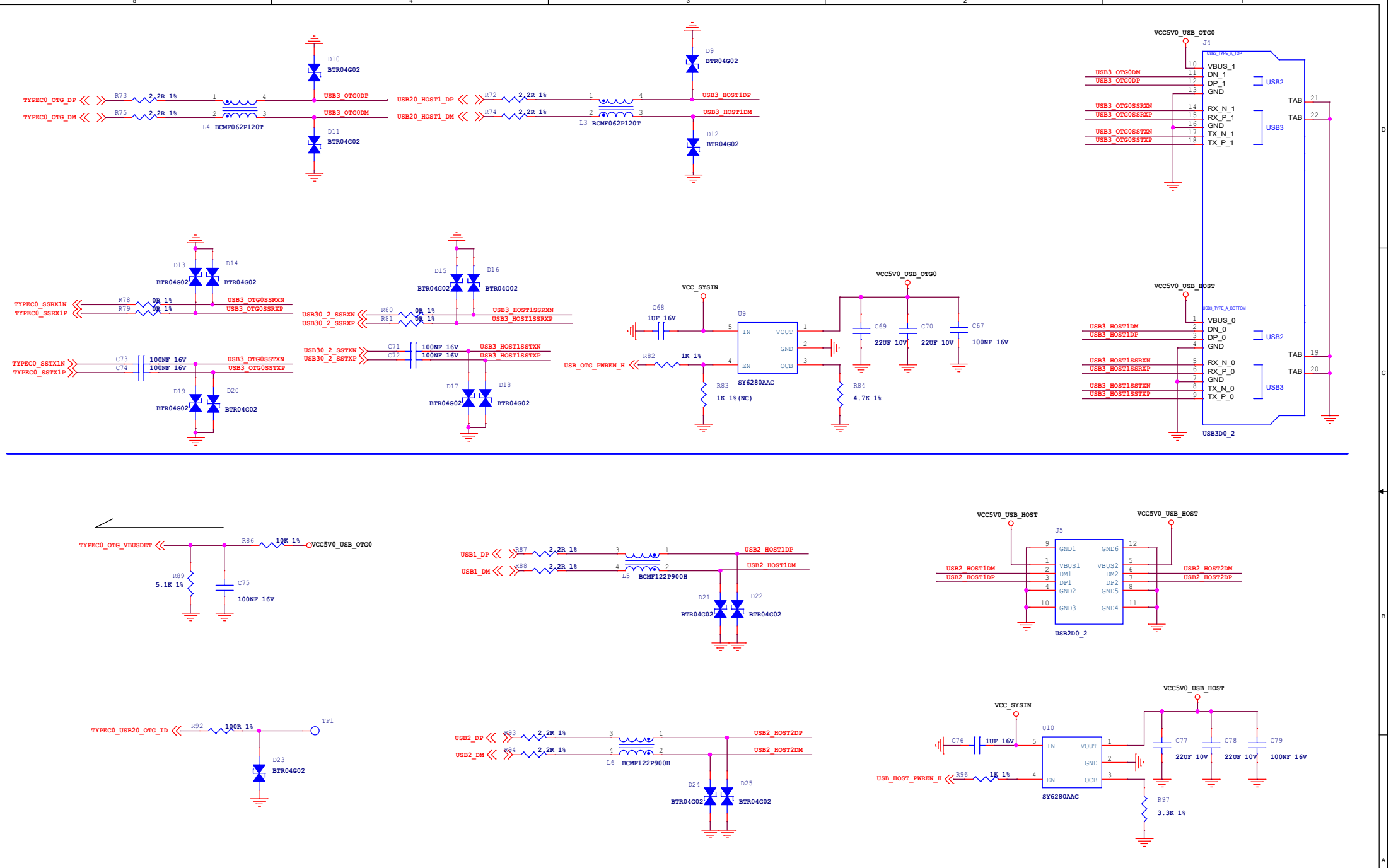

Size	Title:	REV
A3	ROCK 5C	2.1
	Page Name: 14.USB2/USB3 Port	
Date: Friday, September 04, 2026	Sheet 14 of 25	

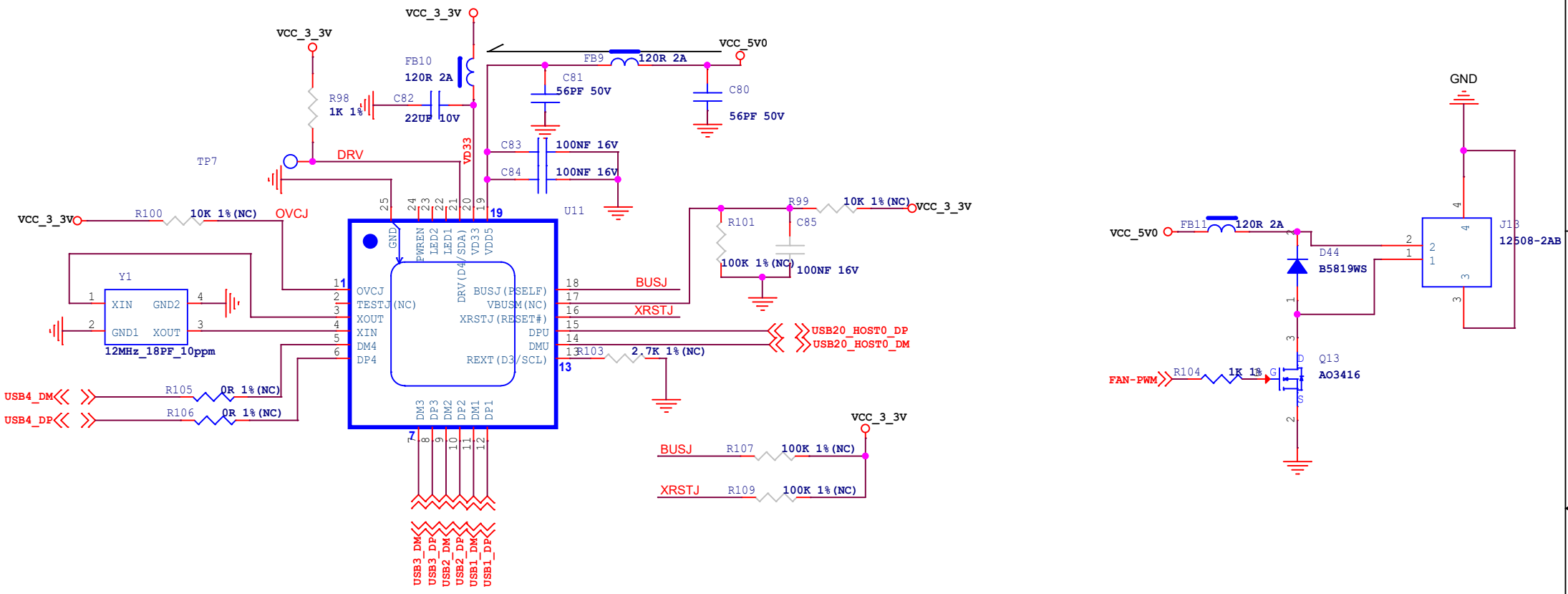

Size	Title:	ROCK 5C	REV
A4	Page Name:	15.USB HUB_FAN	2.1
Date: Friday, September 04, 2026	Sheet 15 of 25		

Giga PHY1

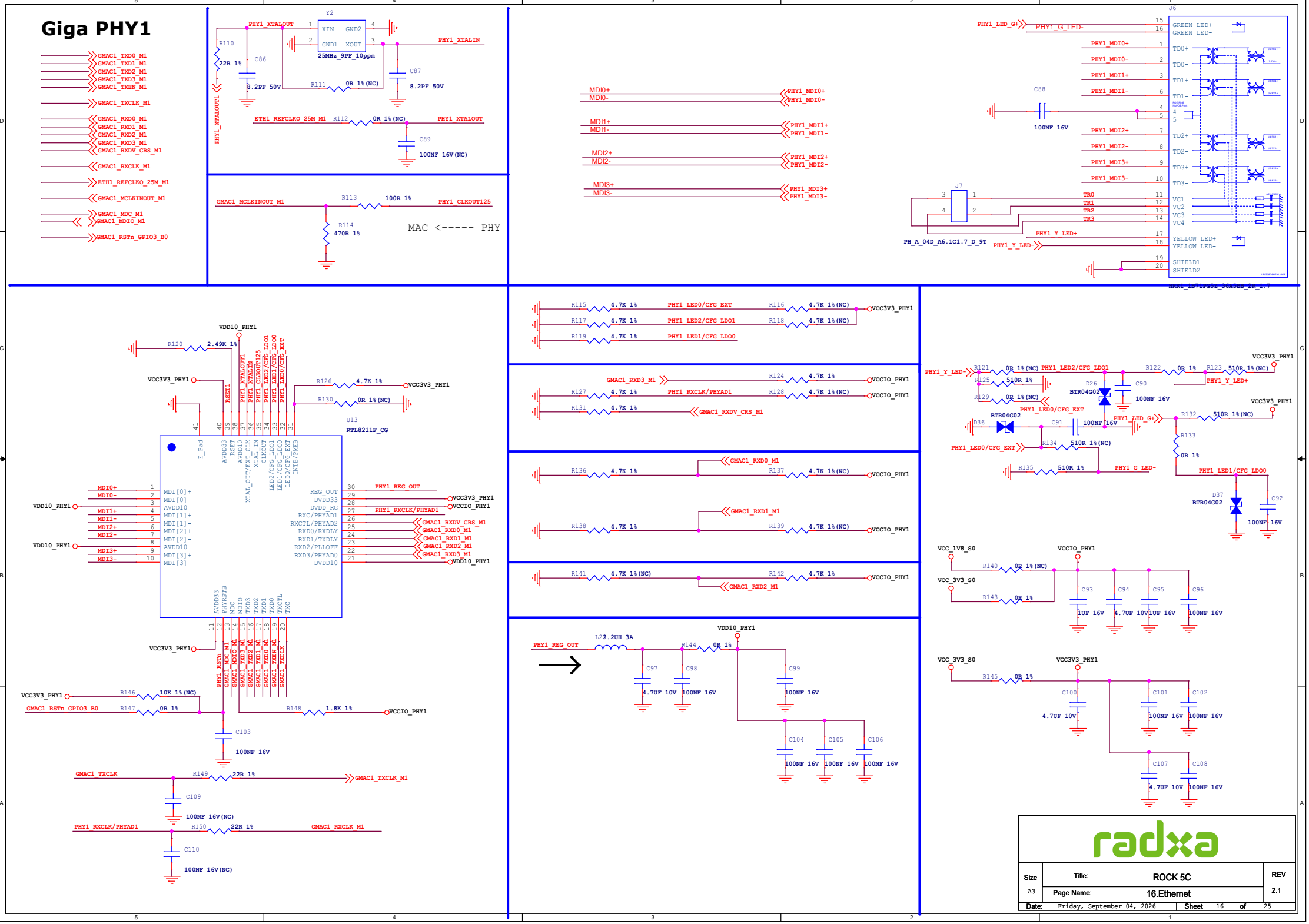
GMAC1_TXD0_M1
GMAC1_TXD1_M1
GMAC1_TXD2_M1
GMAC1_TXD3_M1
GMAC1_TXEN_M1
GMAC1_TXCLK_M1
GMAC1_RXD0_M1
GMAC1_RXD1_M1
GMAC1_RXD2_M1
GMAC1_RXD3_M1
GMAC1_RXDV_CRS_M1
GMAC1_RXCLK_M1
ETH1_REFCLKO_25M_M1
GMAC1_MCLKINOUT_M1
GMAC1_MDC_M1
GMAC1_MDIO_M1
GMAC1_RSTn_GPIO3_B0
Y2
XIN
GND2
GND1
XOUT
25MHz_9PF_10ppm
PHY1_XTALOUT
PHY1_XTALIN
R110
22R 1%
C86
8.2PF 50V
R111
0R 1%(NC)
C87
8.2PF 50V
ETH1_REFCLKO_25M_M1
R112
0R 1%(NC)
C89
100NF 16V(NC)
GMAC1_MCLKINOUT_M1
R113
100R 1%
PHY1_CLKOUT125
R114
470R 1%
MAC <----- PHY
MDI0+
MDI0-
MDI1+
MDI1-
MDI2+
MDI2-
MDI3+
MDI3-
PHY1_MDI0+
PHY1_MDI0-
PHY1_MDI1+
PHY1_MDI1-
PHY1_MDI2+
PHY1_MDI2-
PHY1_MDI3+
PHY1_MDI3-
J6
PHY1_LED_G+
PHY1_G_LED-
GREEN LED+
GREEN LED-
TD0+
TD0-
TD1+
TD1-
C88
100NF 16V
TD2+
TD2-
TD3+
TD3-
J7
TR0
TR1
TR2
TR3
PH_A_04D_A6.1C1.7_D_9T
PHY1_Y_LED+
PHY1_Y_LED-
VC1
VC2
VC3
VC4
YELLOW LED+
YELLOW LED-
SHIELD1
SHIELD2
HRM1_1B71F05B_30A5BD_2R_1.7
VDD10_PHY1
R120
2.49K 1%
VCC3V3_PHY1
R126
4.7K 1%
R130
0R 1%(NC)
U13
RTL8211F_CG
E_Pad
AVDD33
RSET
AVDD10
XTAL_OUT/EXT_CLK
XTAL_IN
CLKOUT
LED2/CFG_LDO1
LED1/CFG_LDO0
LED0/CFG_EXT
INTB/PMEB
MDI[0]+
MDI[0]-
AVDD10
MDI[1]+
MDI[1]-
MDI[2]+
MDI[2]-
AVDD10
MDI[3]+
MDI[3]-
REG_OUT
DVDD33
DVDD_RG
RXC/PHYAD1
RXCTL/PHYAD2
RXD0/RXD1Y
RXD1/TXD1Y
RXD2/PLLOFF
RXD3/PHYAD0
DVDD10
PHY1_REG_OUT
PHY1_RXCLK/PHYAD1
GMAC1_RXDV_CRS_M1
GMAC1_RXD0_M1
GMAC1_RXD1_M1
GMAC1_RXD2_M1
GMAC1_RXD3_M1
AVDD33
PHYRSTB
MDC
MDIO
TXD3
TXD2
TXD1
TXD0
TXCTL
TXC
PHY1_RSTn
GMAC1_MDC_M1
GMAC1_MDIO_M1
GMAC1_TXD3_M1
GMAC1_TXD2_M1
GMAC1_TXD1_M1
GMAC1_TXD0_M1
GMAC1_TXEN_M1
GMAC1_TXCLK
R146
10K 1%(NC)
GMAC1_RSTn_GPIO3_B0
R147
0R 1%
R148
1.8K 1%
VCCIO_PHY1
C103
100NF 16V
GMAC1_TXCLK
R149
22R 1%
GMAC1_TXCLK_M1
C109
100NF 16V(NC)
PHY1_RXCLK/PHYAD1
R150
22R 1%
GMAC1_RXCLK_M1
C110
100NF 16V(NC)
R115
4.7K 1%
PHY1_LED0/CFG_EXT
R116
4.7K 1%(NC)
VCC3V3_PHY1
R117
4.7K 1%
PHY1_LED2/CFG_LDO1
R118
4.7K 1%(NC)
R119
4.7K 1%
PHY1_LED1/CFG_LDO0
GMAC1_RXD3_M1
R124
4.7K 1%
VCCIO_PHY1
R127
4.7K 1%
PHY1_RXCLK/PHYAD1
R128
4.7K 1%(NC)
R131
4.7K 1%
GMAC1_RXDV_CRS_M1
GMAC1_RXD0_M1
R136
4.7K 1%
R137
4.7K 1%(NC)
GMAC1_RXD1_M1
R138
4.7K 1%
R139
4.7K 1%(NC)
R141
4.7K 1%(NC)
R142
4.7K 1%
GMAC1_RXD2_M1
VDD10_PHY1
PHY1_REG_OUT
L2 2.2UH 3A
R144
0R 1%
C97
4.7UF 10V
C98
100NF 16V
C99
100NF 16V
C104
100NF 16V
C105
100NF 16V
C106
100NF 16V
PHY1_Y_LED-
R121
0R 1%(NC)
PHY1_LED2/CFG_LDO1
R122
0R 1%
R123
510R 1%(NC)
PHY1_Y_LED+
R125
510R 1%
D26
BTR04G02
C90
100NF 16V
R129
0R 1%(NC)
PHY1_LED0/CFG_EXT
BTR04G02
D36
C91
100NF 16V
PHY1_LED_G+
R132
510R 1%(NC)
R133
0R 1%
PHY1_LED0/CFG_EXT
R134
510R 1%(NC)
R135
510R 1%
PHY1_G_LED-
PHY1_LED1/CFG_LDO0
D37
BTR04G02
C92
100NF 16V
VCC_1V8_S0
VCCIO_PHY1
R140
0R 1%(NC)
VCC_3V3_S0
R143
0R 1%
C93
1UF 16V
C94
4.7UF 10V
C95
1UF 16V
C96
100NF 16V
VCC_3V3_S0
VCC3V3_PHY1
R145
0R 1%
C100
4.7UF 10V
C101
100NF 16V
C102
100NF 16V
C107
4.7UF 10V
C108
100NF 16V
radxa
Size
A3
Title:
ROCK 5C
REV
2.1
Page Name:
16.Ethernet
Date:
Friday, September 04, 2026
Sheet
16
of
25

MIPI_LCD_TX1

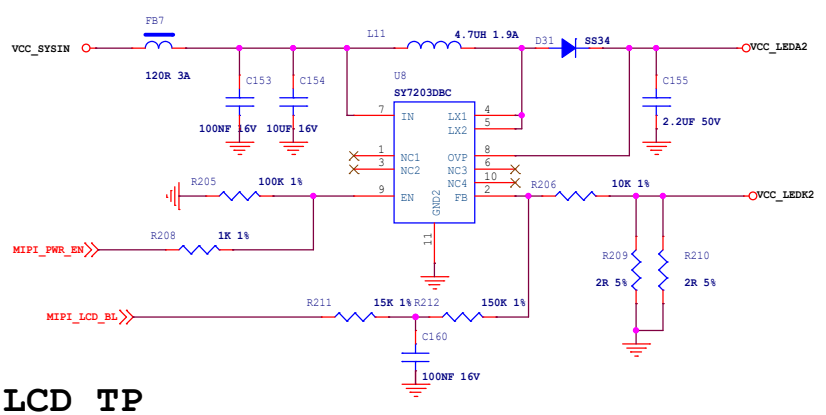

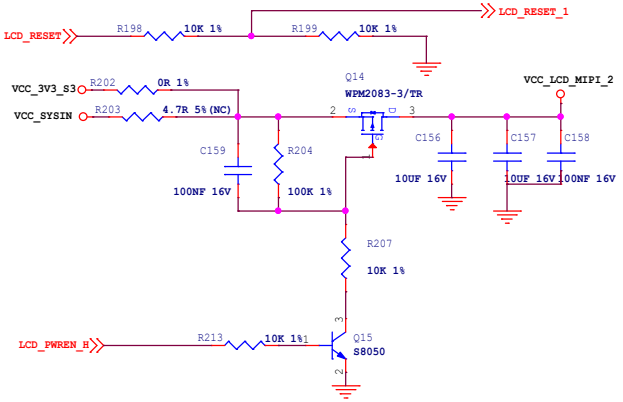

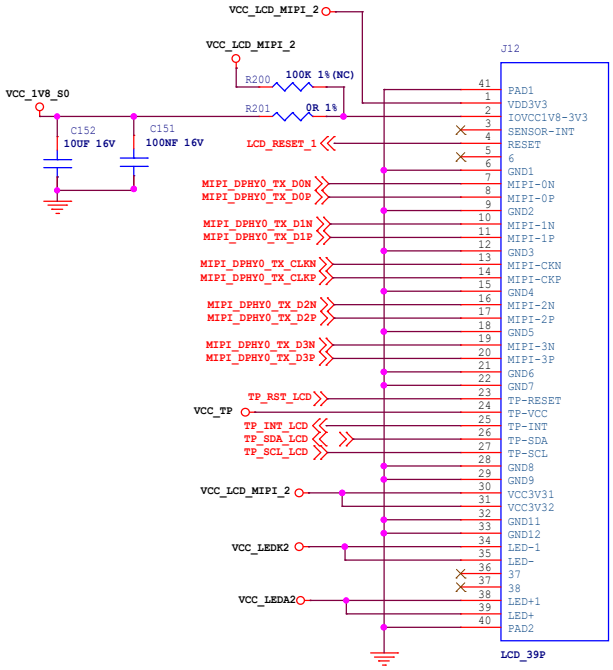

LCD_TP

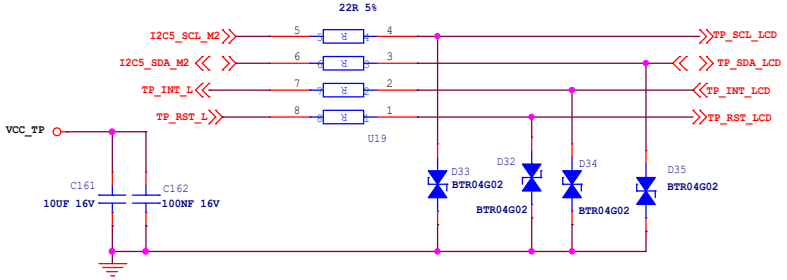

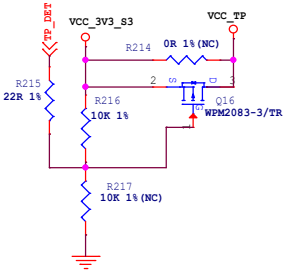

MIPI_RX

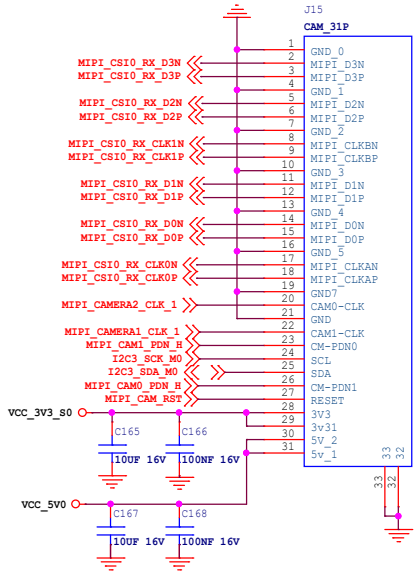

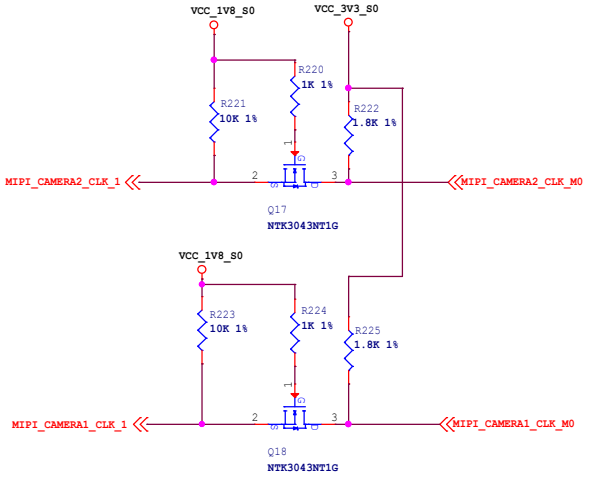

radxa

Size	Title:	ROCK 5C	REV
A3	Page Name:	17.MIPI_LCD	2.1
Date: Friday, September 04, 2026	Sheet 17 of 25		

MicroSD Card

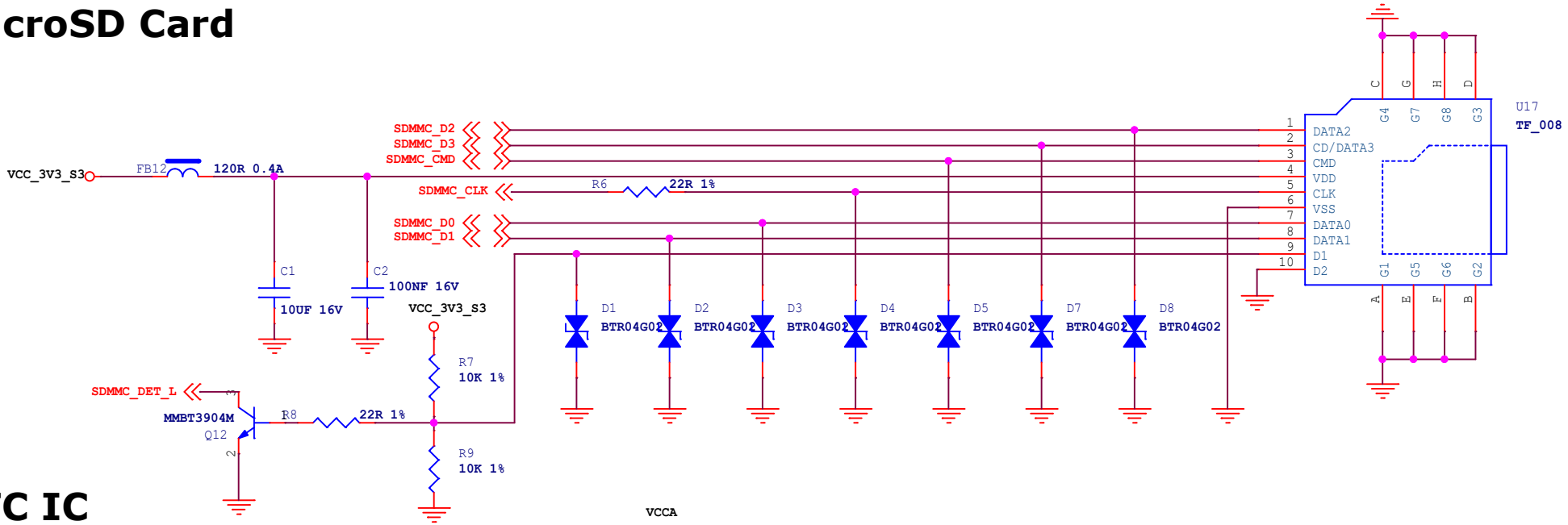

RTC IC

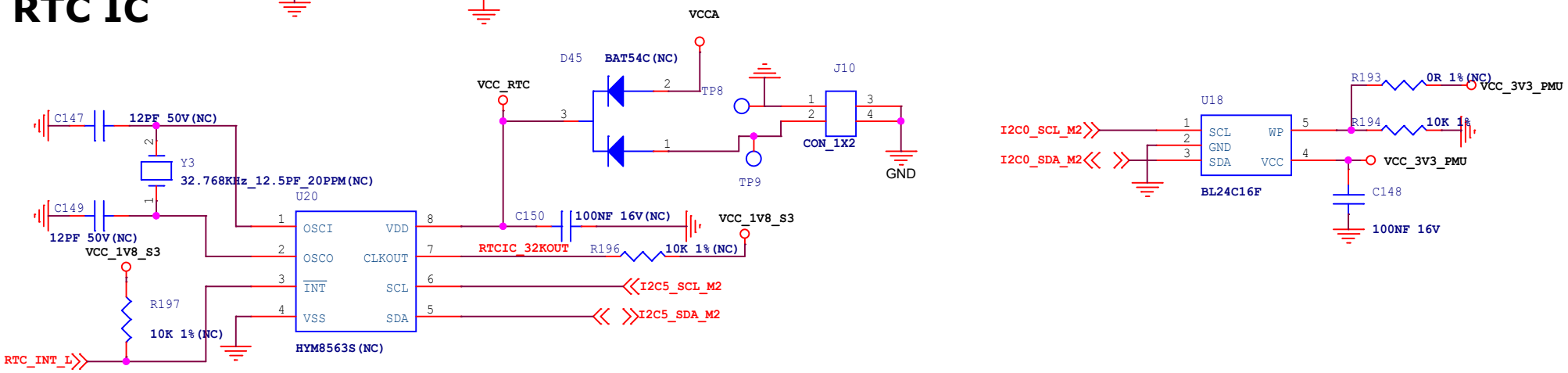

Size	Title:	ROCK 5C	REV
A4	Page Name:	18.MicroSD Card	2.1
Date: Friday, September 04, 2026	Sheet 18 of 25		

CODEC ES8316

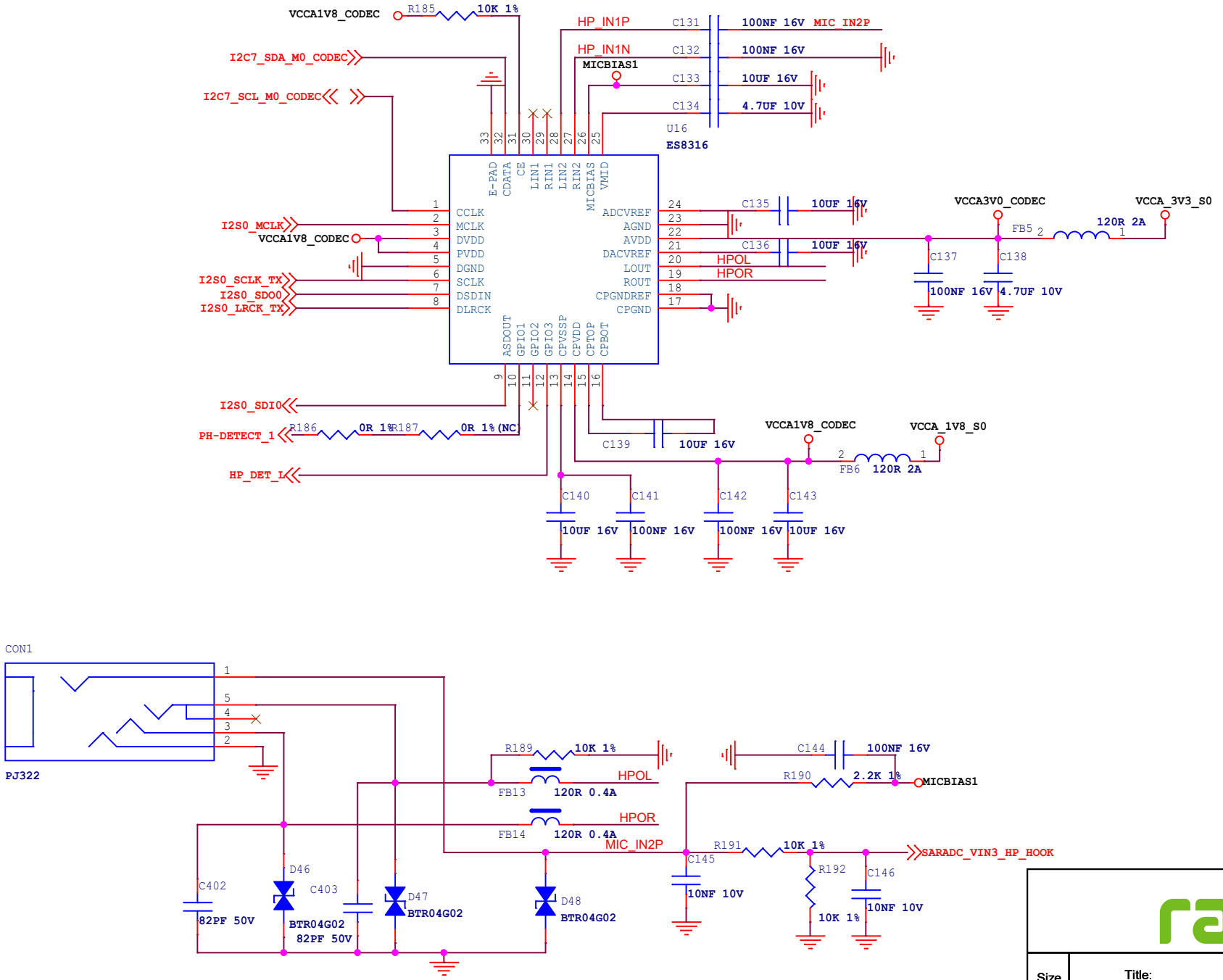

Size	Title:	REV
A4	ROCK 5C	2.1
	Page Name: 19.Audio ES8316	
Date: Friday, September 04, 2026	Sheet 19 of 25	

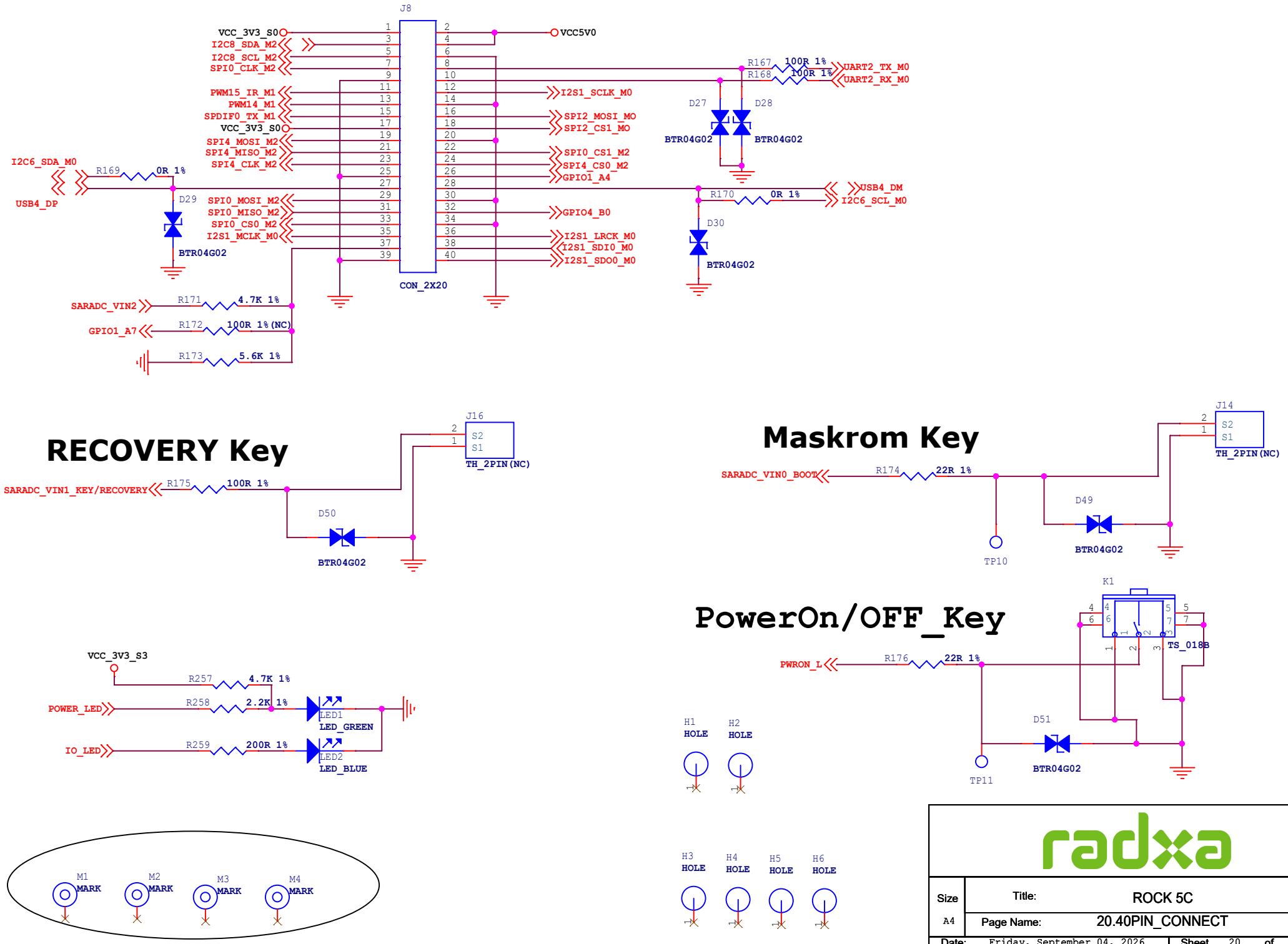

Size	Title:	ROCK 5C	REV
A4	Page Name:	20.40PIN_CONNECT	2.1
Date: Friday, September 04, 2026		Sheet 20 of 25	

PMIC1 RK806-1

PMIC RK806-1 BUCK

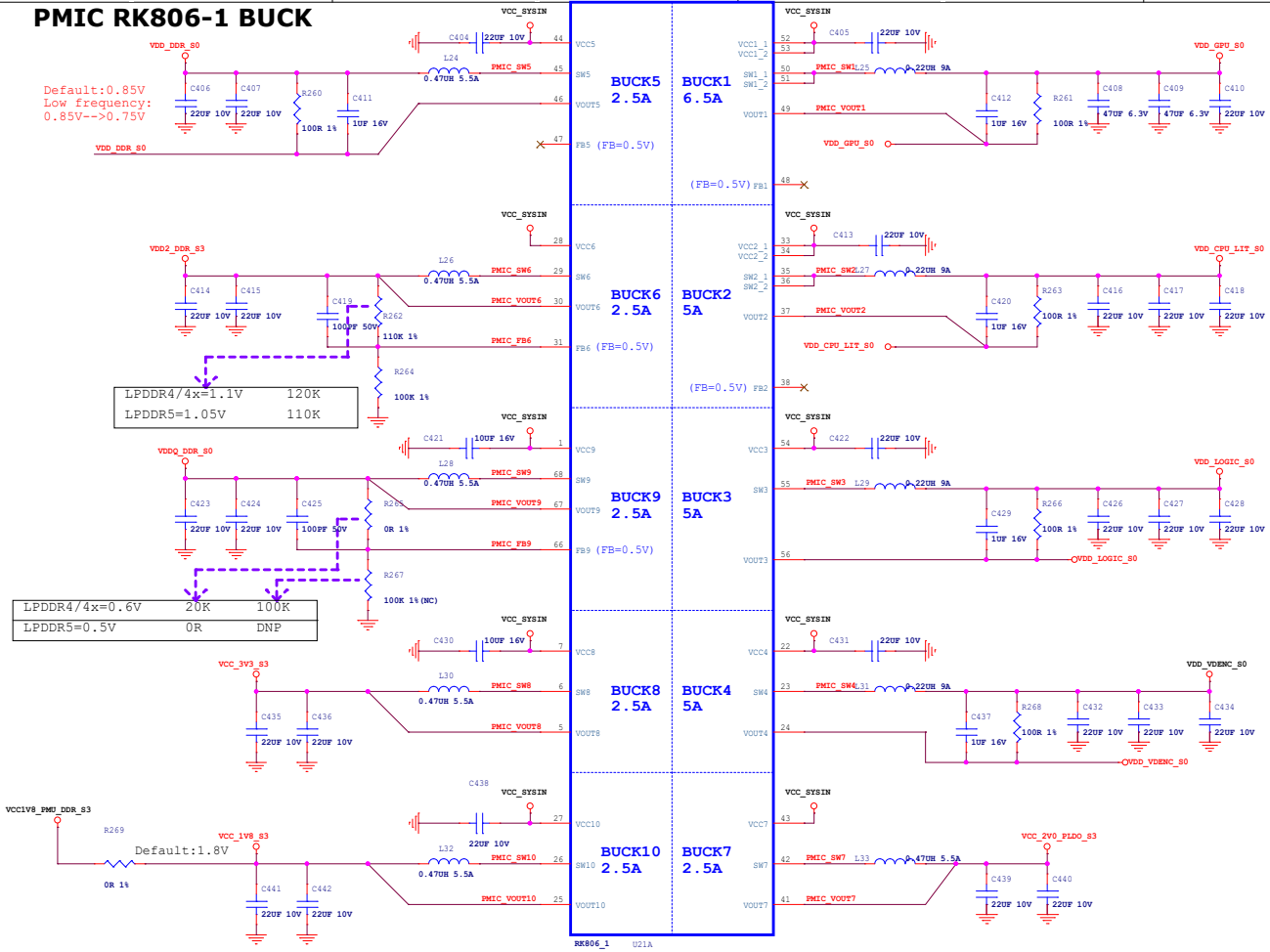

PMIC RK806-1 Managerment

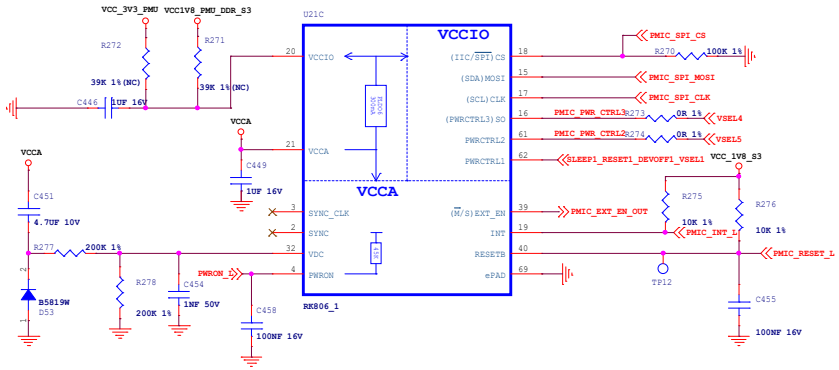

PMIC RK806-1 LDO

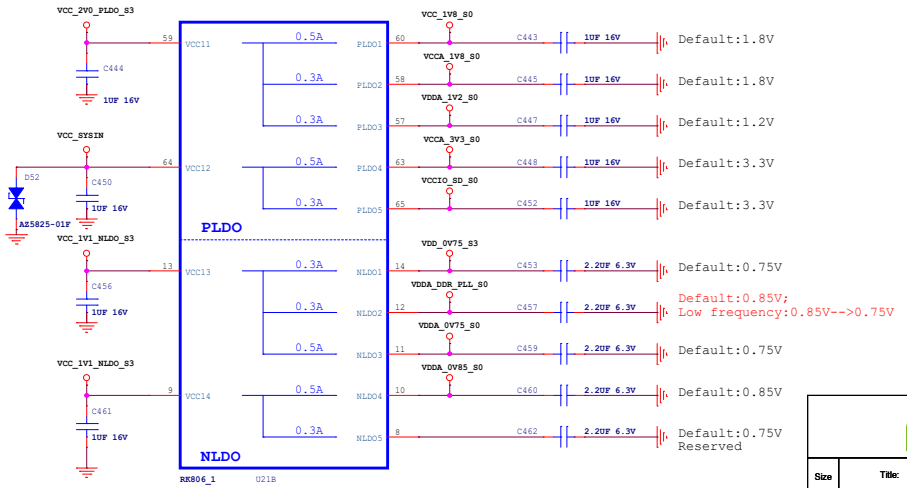

radxa

Size	Title:	REV
C	ROCK 5C	2.1
	Page Name: 21.Power-PMIC_RK806-1	
Date: Friday, September 04, 2026	Sheet 21 of 25	

VDD_CPU_BIG0

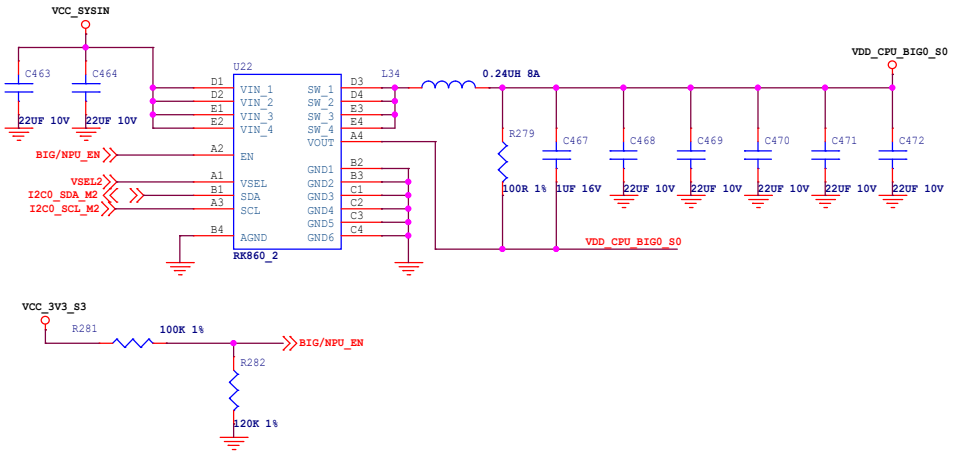

VDD_CPU_BIG1

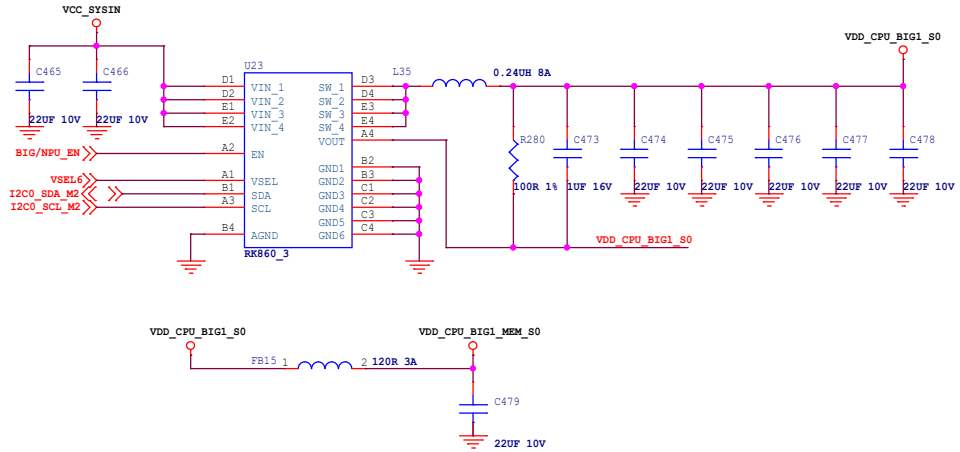

VDD_NPU

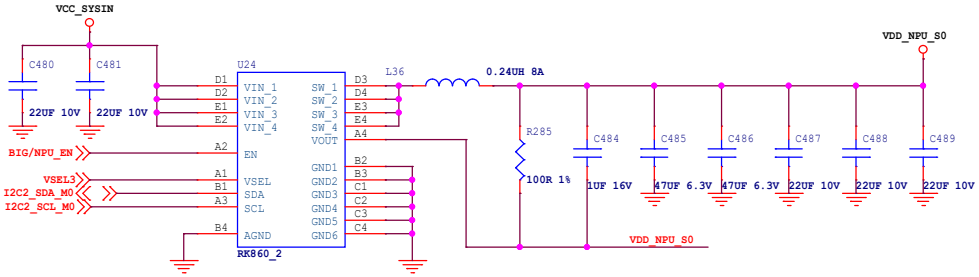

VCC_1V1_NLDO

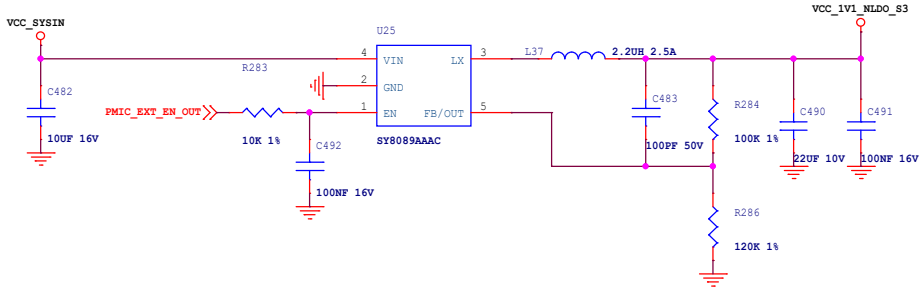

VCC_3V3_S0

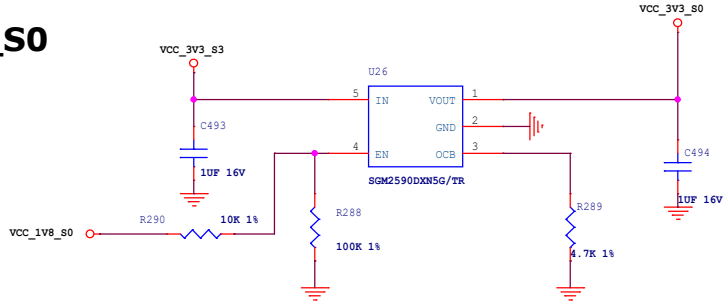

radxa

Size	Title:	ROCK 5C	REV
A3	Page Name:	22.Power_Ext	2.1
Date: Friday, September 04, 2026	Sheet 22 of 25		

DC IN

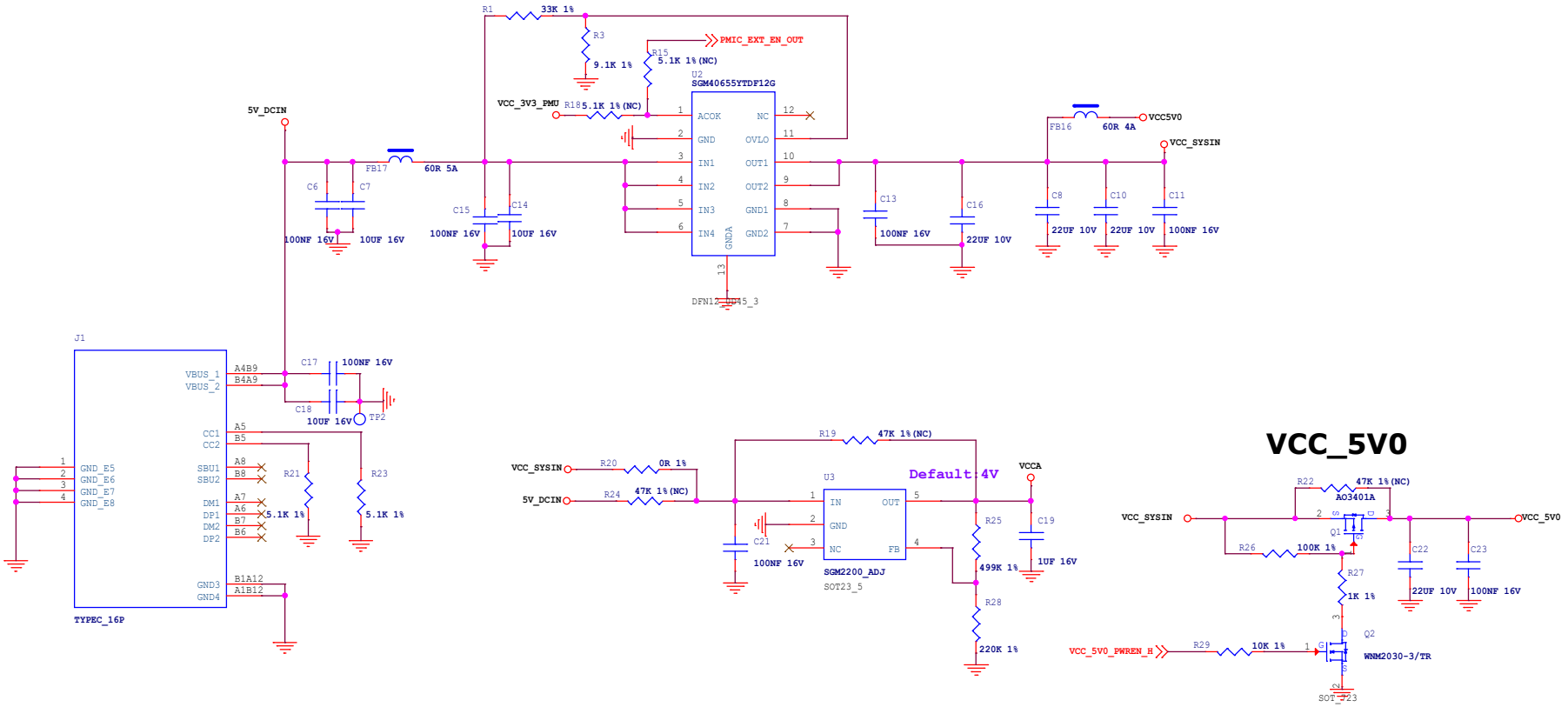

VCC_5V0

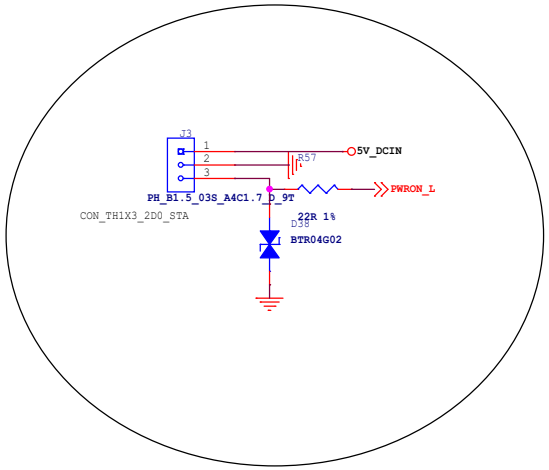

radxa

Size	Title:	ROCK 5C	REV
A3	Page Name:	23.Power DC IN	2.1
Date: Friday, September 04, 2026	Sheet 23 of 25		

PCIE

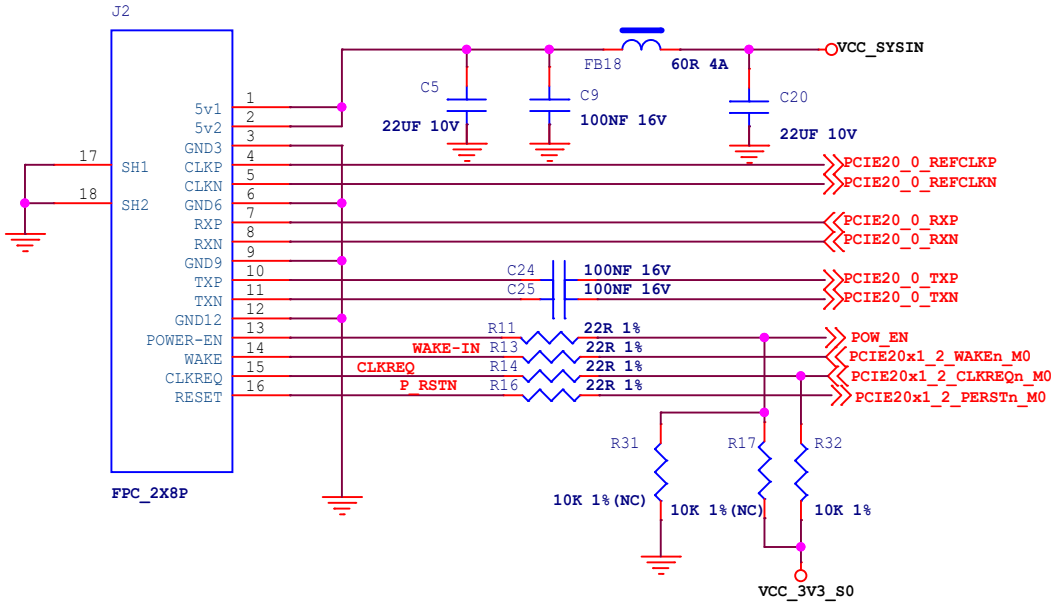

eMMC Flash

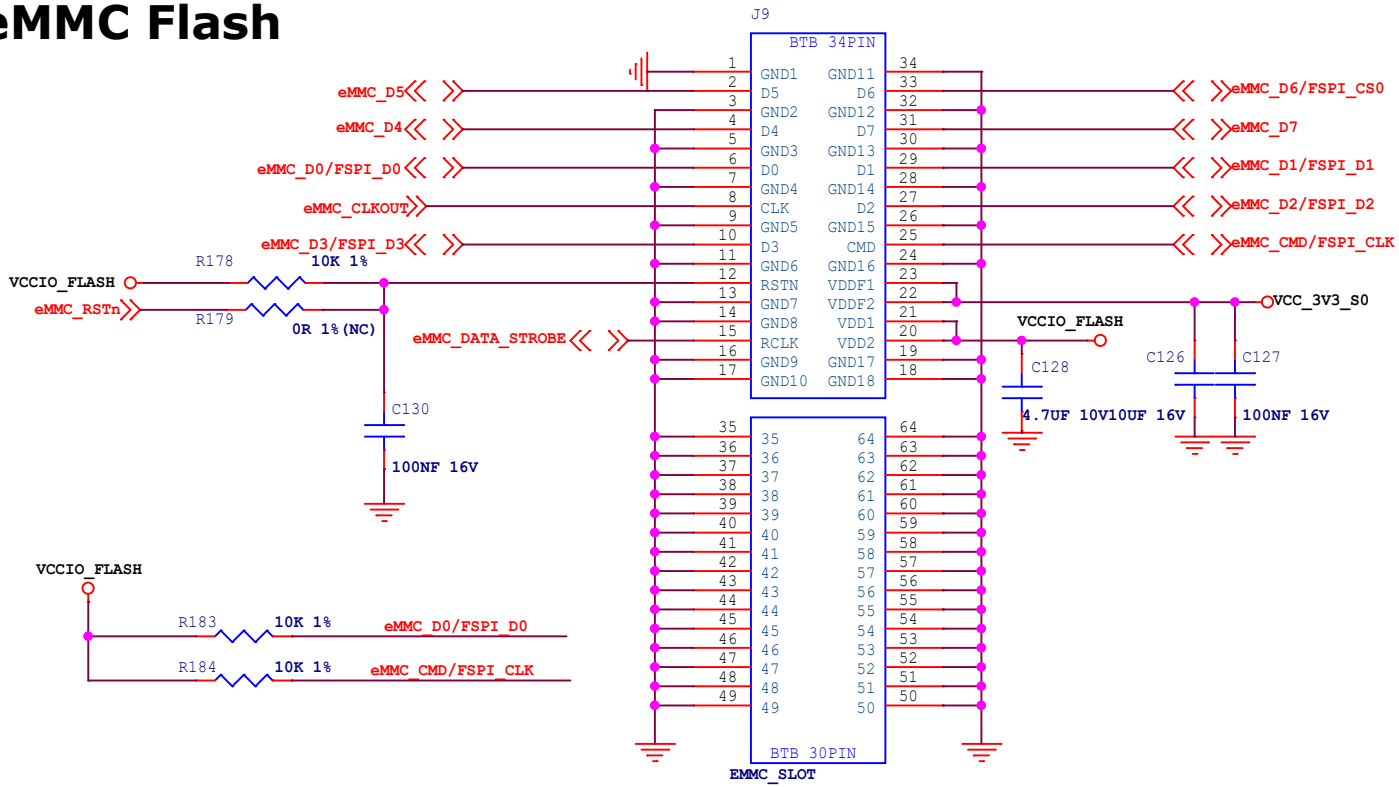

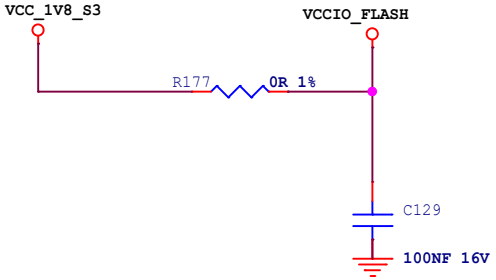

Size	Title:	ROCK 5C	REV
A4	Page Name:	24.SPI FLASH/PCIE	2.1
Date: Friday, September 04, 2026	Sheet 24 of 25		

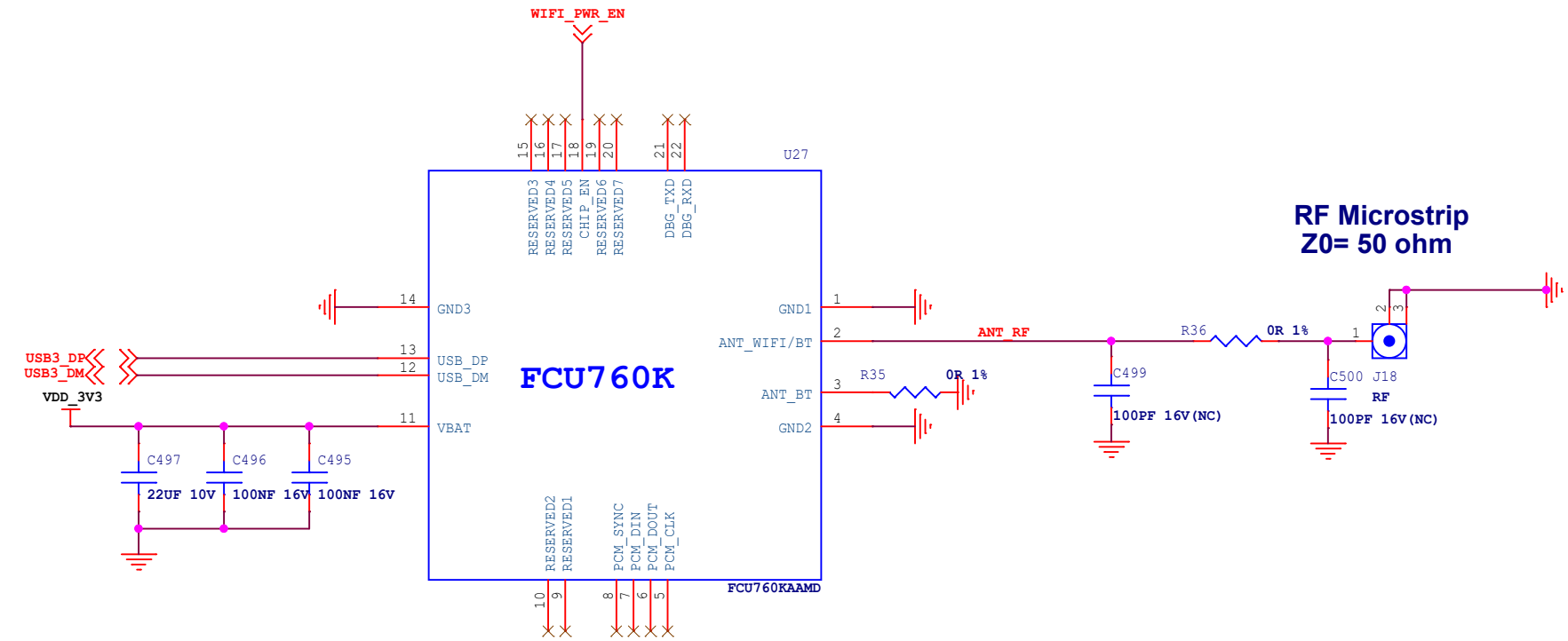

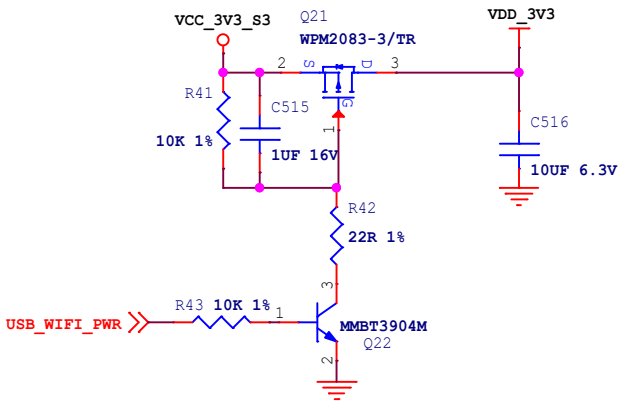

radxa

Size	Title:	ROCK 5C	REV
A4	Page Name:	<Doc>	2.1
Date: Friday, September 04, 2026	Sheet 25 of 25		